EU DECLARATION OF CONFORMITY
DECLARACIÓN UE DE CONFORMIDAD

www.basor.com

The company / *La Empresa*:
BASOR ELECTRIC, S.A.
Address / *Dirección*:
Av. Alcodar, 45-47, 46700. Gandía (VLC), Spain.

Declares that the product:
Declara que el producto:
BASORTRAY ERE

Installed in accordance to the installation standards, manufacturer's instructions and professional rules, duly maintained and used for the applications as intended.
Instalado de acuerdo con las normas de instalación, instrucciones del fabricante y conforme a las reglas profesionales, debidamente mantenido y utilizado en las aplicaciones para las que está previsto.

Complies with the essential requirements of the Council Directives:
Cumple con los requisitos esenciales de las Directivas del Consejo:
2014/35/UE (Low Voltage Directive) / *(Directiva de Baja Tensión)*

Incorporated in the Spanish Legislation in: R.D. 187/2016.
Incorporado en la Legislación Española en: R.D. 187/2016.

And it is suitable and safe for the intended use and it is in conformity with the following standard:
Es adecuado y seguro para el uso a que está destinado y es conforme con la siguiente norma:
EN IEC 61537

Additional information:
Información adicional:

This product is intended to be installed and maintained by skilled persons, it may be used by ordinary persons only as a replacement part, to substitute for an identical device.
Este producto está previsto para ser instalado y mantenido por un profesional, puede ser usado por una persona no formada para reemplazamiento de uno idéntico.

Place and date: *Lugar y fecha:*	
Gandía May 2026 *Gandía Mayo 2026*	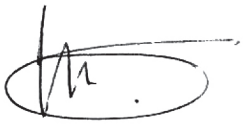 *Technical Department / Departamento técnico*

ERE 50X50

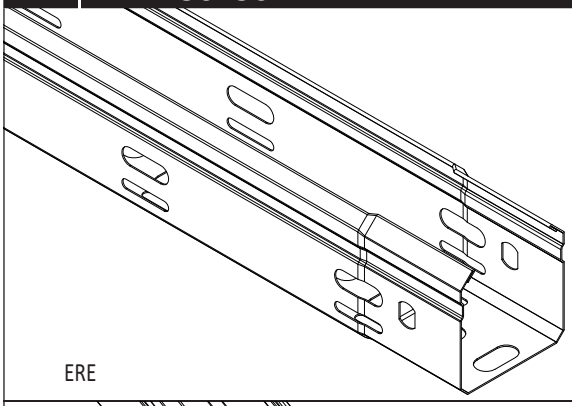

ERE

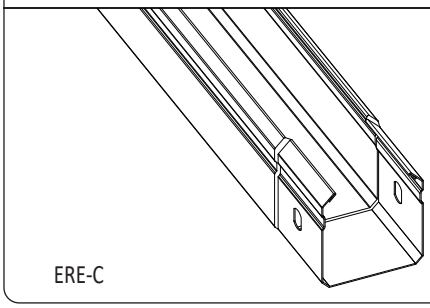

ERE-C

Model (BxH):

50x50.

Materials and Coating:

PG - Pre Galvanized acc. to EN 10346 (Steel Grade DX51).
PGP - Pre Galvanized acc. to EN 10346 (Grade DX51) + Polyester Powder Coating.
ZAM3K - Pre Galvanized with ZnAlMg coating, acc. to EN 10346 (Steel Grade DX51).
HDG - Hot-Dip Galvanized acc. to ISO 1461 (Steel DD11 acc. to EN 10111).

Characteristics of the cable tray:

- Metallic
- Non-flame propagating component
- Sistem with electrical continuity
- Electrically conductive component
- Minimum temperature of -50 ˚C
- Maximum temperature of 150 ˚C
- Impact Strength: 20J
- With metallic coating, resistance to corrosion:
  - PG coating: class 3
  - PGP coating: class 8+ (>1000 hours in salt spray test)
  - ZAM3K coating: class 8+ (>3000 hours in salt spray test)
  - HDG coating: class 5 (45 µm)
- Classification according to the perforation in the base area:
  - Non-drilled tray: A
  - Drilled tray: B

ASSEMBLING INSTRUCTIONS

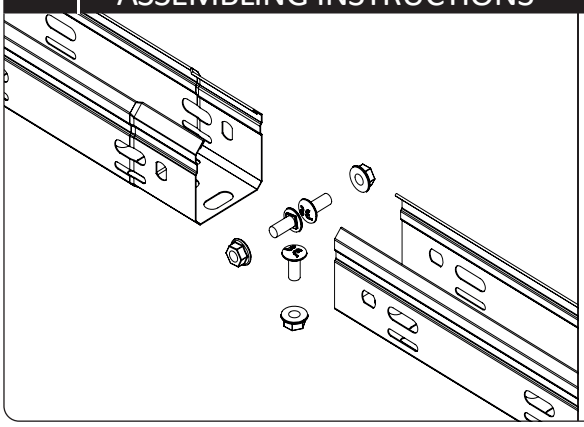

- To set up the self-assembly system 3 B1 bolt sets are needed for each cable tray and no union is needed.
- The recommended installation of the union is between L/4 and L/5 of the distance between supports, being “L” the distance between supports.
- Joints between trays must not be placed right above supports. Joints shall be avoided at the end spans.
- Tray installations for electrical systems should NOT run under other types of canalisations such as water, steam or gas.
- To guarantee a good ventilation it is recommended installing the trays keeping a minimum distance of 250 mm among each level.
- To allow optimal ventilation of the cables, trays placed on supports must be separated 20 mm from the wall.

Accesories:

This family has large array of accessories: Cover TERE 50, cover clamp PTER 50X50, horizontal bend CPER 50X50, vertical inside bend CCER 50X50, vertical outside bend CXER 50X50, derivation ASER 50x50, union joint JUER 50X50 and end conver TFERE 50.

SAFE WORKING LOAD

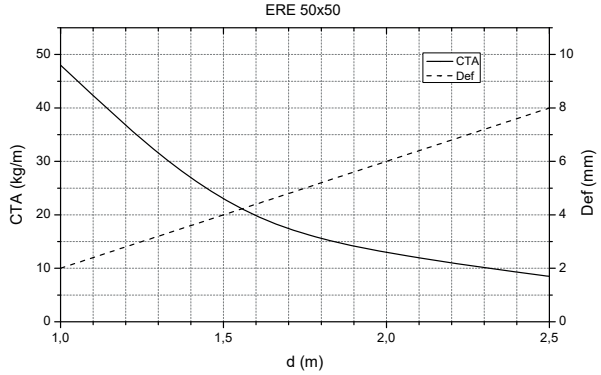

This technical data sheet issued accordingly to the fulfillment of the product Standard, is itself a necessary analyses of the electric risks according to the low tension Directive 2014/35/UE of February 26th 2014, in effect from May 20th 2016.