MITSUBISHI ELECTRIC

SPLIT-TYPE AIR CONDITIONERS

Revision F:
- 8. REFRIGERANT SYSTEM DIAGRAM have been corrected.

OBH789 REVISED EDITION-E is void.

OUTDOOR UNIT

HFC utilized R32

No. OBH789
REVISED EDITION-F

SERVICE MANUAL

Models

MUZ-AP25VG - E1, ET1, E2, ET2, ER2, E3, ET3, ER3
MUZ-AP35VG - E1, ET1, E2, ET2, ER2, E3, ET3, ER3
MUZ-AP42VG - E1, ET1, E2, ET2, ER2
MUZ-AP50VG - E1, ET1, ER1, E2
MUZ-AP60VG - E1, ET1, ER1, E2
MUZ-AP71VG - E1, ET1, ER1, E2
MUZ-AP25VGH - E1, E2, E3
MUZ-AP35VGH - E1, E2, E3
MUZ-AP42VGH - E1, E2
MUZ-AP50VGH - E1, E2

Indoor unit service manual
MSZ-AP•VG, VGK Series (OBH788)

MUZ-AP25VG MUZ-AP25VGH
MUZ-AP35VG MUZ-AP35VGH
MUZ-AP42VG MUZ-AP42VGH

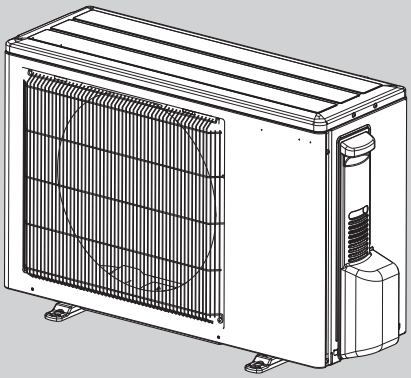

CONTENTS

1. TECHNICAL CHANGES ····· 3
2. SERVICING PRECAUTIONS FOR UNITS USING REFRIGERANT R32 ····· 4
3. PART NAMES AND FUNCTIONS ····· 6
4. SPECIFICATION ····· 7
5. NOISE CRITERIA CURVES ····· 10
6. OUTLINES AND DIMENSIONS ····· 12
7. WIRING DIAGRAM ····· 15
8. REFRIGERANT SYSTEM DIAGRAM ····· 23
9. PERFORMANCE CURVES ····· 26
10. ACTUATOR CONTROL ····· 46
11. SERVICE FUNCTIONS ····· 47
12. TROUBLESHOOTING ····· 48
13. DISASSEMBLY INSTRUCTIONS ····· 69

PARTS CATALOG (OBB789)

Use the specified refrigerant only

Never use any refrigerant other than that specified.

Doing so may cause a burst, an explosion, or fire when the unit is being used, serviced, or disposed of.
Correct refrigerant is specified in the manuals and on the spec labels provided with our products.
We will not be held responsible for mechanical failure, system malfunction, unit breakdown or accidents caused by failure to follow the instructions.

<Preparation before the repair service>

- Prepare the proper tools.
- Prepare the proper protectors.
- Provide adequate ventilation.
- After stopping the operation of the air conditioner, turn off the power-supply breaker and pull the power plug.
- Discharge the capacitor before the work involving the electric parts.

<Precautions during the repair service>

- Do not perform the work involving the electric parts with wet hands.
- Do not pour water into the electric parts.
- Do not touch the refrigerant.
- Do not touch the hot or cold areas in the refrigeration cycle.
- When the repair or the inspection of the circuit needs to be done without turning off the power, exercise great caution not to touch the live parts.

⚠ WARNING

- **When the refrigeration circuit has a leak, do not execute pump down with the compressor.**
- **When pumping down the refrigerant, stop the compressor before disconnecting the refrigerant pipes. The compressor may burst if air etc. get into it.**
- **When opening or closing the valve below freezing temperatures, refrigerant may spurt out from the gap between the valve stem and the valve body, resulting in injuries.**

Revision A:
• MUZ-AP25/35/42VG- E2, ET2, ER2, MUZ-AP25/35/42VGH- E2 and MUZ-AP60/71VG- E1, ET1 have been added.

Revision B:
• MUZ-AP50/60/71VG- ER1 have been added.

Revision C:
• MUZ-AP25/35VG- E3, ET3 and MUZ-AP25/35VGH- E3 have been added.

Revision D:
• MUZ-AP25/35VG- ER3, MUZ-AP50/60/71VG- E2 and MUZ-AP50VGH- E2 have been added.

Revision E:
• A warning when opening or closing the valve has been added.

Revision F:
• 8. REFRIGERANT SYSTEM DIAGRAM have been corrected.

1 TECHNICAL CHANGES

MUZ-AP25VG - E1, ET1, ER2
MUZ-AP35VG - E1, ET1, ER2
MUZ-AP42VG - E1, ET1, ER2
MUZ-AP50VG - E1, ET1, ER1
MUZ-AP25VGH - E1
MUZ-AP35VGH - E1
MUZ-AP42VGH - E1
MUZ-AP50VGH - E1
MUZ-AP60VG - E1, ET1, ER1
MUZ-AP71VG - E1, ET1, ER1

1. New model

MUZ-AP25VG - E1, ET1 → MUZ-AP25VG - E2, ET2
MUZ-AP35VG - E1, ET1 → MUZ-AP35VG - E2, ET2
MUZ-AP42VG - E1, ET1 → MUZ-AP42VG - E2, ET2
MUZ-AP50VG - E1 → MUZ-AP50VG - E2
MUZ-AP60VG - E1 → MUZ-AP60VG - E2
MUZ-AP71VG - E1 → MUZ-AP71VG - E2
MUZ-AP25VGH - E1 → MUZ-AP25VGH - E2
MUZ-AP35VGH - E1 → MUZ-AP35VGH - E2
MUZ-AP42VGH - E1 → MUZ-AP42VGH - E2
MUZ-AP50VGH - E1 → MUZ-AP50VGH - E2

1. Inverter P.C. board has been changed.
2. Outdoor fan motor has been changed.

MUZ-AP25VG - E2, ET2, ER2 → MUZ-AP25VG - E3, ET3, ER3
MUZ-AP35VG - E2, ET2, ER2 → MUZ-AP35VG - E3, ET3, ER3
MUZ-AP25VGH - E2 → MUZ-AP25VGH - E3
MUZ-AP35VGH - E2 → MUZ-AP35VGH - E3

1. Compressor has been changed.
2. Inverter P.C. board has been changed.

2 SERVICING PRECAUTIONS FOR UNITS USING REFRIGERANT R32

Servicing precautions for units using refrigerant R32

WARNING

This unit uses a flammable refrigerant.
If refrigerant leaks and comes in contact with fire or heating part, it will create harmful gas and there is risk of fire.

- Do not use means to accelerate the defrosting process or to clean, other than those recommended by the manufacturer.
- The appliance shall be stored in a room without continuously operating ignition sources (for example: open flames, an operating gas appliance or an operating electric heater.)
- Do not pierce or burn.
- Be aware that refrigerants may not contain an odor.
- Pipe-work shall be protected from physical damage.
- The installation of pipe-work shall be kept to a minimum.
- Compliance with national gas regulations shall be observed.
- Keep any required ventilation openings clear of obstruction.
- Servicing shall be performed only as recommended by the manufacturer.
- The appliance shall be stored so as to prevent mechanical damage from occurring.

Basic work procedures are the same as those for conventional units using refrigerant R410A.
However, pay careful attention to the following points.

1. Information on servicing
   (1) Checks on the Area
   Prior to beginning work on systems containing flammable refrigerants, safety checks are necessary to ensure that the risk of ignition is minimized.
   (2) Work Procedure
   Work shall be undertaken under a controlled procedure so as to minimize the risk of a flammable gas or vapor being present while the work is being performed.
   (3) General Work Area
   All maintenance staff and others working in the local area shall be instructed on the nature of work being carried out. Work in confined spaces shall be avoided. The area around the workspace shall be sectioned off. Ensure that the conditions within the area have been made safe by control of flammable material.
   (4) Checking for Presence of Refrigerant
   The area shall be checked with an appropriate refrigerant detector prior to and during work, to ensure the technician is aware of potentially toxic or flammable atmospheres. Ensure that the leak detection equipment being used is suitable for use with all applicable refrigerants, i.e. non-sparking, adequately sealed or intrinsically safe.
   (5) Presence of Fire Extinguisher
   If any hot work is to be conducted on the refrigeration equipment or any associated parts, appropriate fire extinguishing equipment shall be available to hand. Have a dry powder or CO2 fire extinguisher adjacent to the charging area.
   (6) No Ignition Sources
   No person carrying out work in relation to a refrigeration system which involves exposing any pipe work shall use any sources of ignition in such a manner that it may lead to the risk of fire or explosion. All possible ignition sources, including cigarette smoking, should be kept sufficiently far away from the site of installation, repairing, removing and disposal, during which refrigerant can possibly be released to the surrounding space. Prior to work taking place, the area around the equipment is to be surveyed to make sure that there are no flammable hazards or ignition risks. "No Smoking" signs shall be displayed.
   (7) Ventilated Area
   Ensure that the area is in the open or that it is adequately ventilated before breaking into the system or conducting any hot work. A degree of ventilation shall continue during the period that the work is carried out. The ventilation should safely disperse any released refrigerant and preferably expel it externally into the atmosphere.
   (8) Checks on the Refrigeration Equipment
   Where electrical components are being changed, they shall be fit for the purpose and to the correct specification. At all times the manufacturer's maintenance and service guidelines shall be followed. If in doubt, consult the manufacturer's technical department for assistance.
   The following checks shall be applied to installations using flammable refrigerants:
   • The charge size is in accordance with the room size within which the refrigerant containing parts are installed.
   • The ventilation machinery and outlets are operating adequately and are not obstructed.
   • If an indirect refrigerating circuit is being used, the secondary circuit shall be checked for the presence of refrigerant.
   • Marking to the equipment continues to be visible and legible. Markings and signs that are illegible shall be corrected.
   • Refrigeration pipe or components are installed in a position where they are unlikely to be exposed to any substance which may corrode refrigerant containing components, unless the components are constructed of materials which are inherently resistant to being corroded or are suitably protected against being corroded.
   (9) Checks on Electrical Devices
   Repair and maintenance to electrical components shall include initial safety checks and component inspection procedures. If a fault exists that could compromise safety, then no electrical supply shall be connected to the circuit until it is satisfactorily dealt with. If the fault cannot be corrected immediately but it is necessary to continue operation, an adequate temporary solution shall be used. This shall be reported to the owner of the equipment so all parties are advised.
   Initial safety checks shall include that:
   • capacitors are discharged: this shall be done in a safe manner to avoid possibility of sparking;
   • no live electrical components and wiring are exposed while charging, recovering or purging the system;
   • there is continuity of earth bonding
2. Repairs to Sealed Components
   (1) During repairs to sealed components, all electrical supplies shall be disconnected from the equipment being worked upon prior to any removal of sealed covers, etc. If it is absolutely necessary to have an electrical supply to equipment during servicing, then a permanently operating form of leak detection shall be located at the most critical point to warn of a potentially hazardous situation.
   (2) Particular attention shall be paid to the following to ensure that by working on electrical components, the casing is not altered in such a way that the level of protection is affected. This shall include damage to cables, excessive number of connections, terminals not made to original specification, damage to seals, incorrect fitting of glands, etc.
   Ensure that the apparatus is mounted securely.
   Ensure that seals or sealing materials have not degraded to the point that they no longer serve the purpose of preventing the ingress of flammable atmospheres. Replacement parts shall be in accordance with the manufacturer's specifications.
3. Repair to intrinsically Safe Components
   Do not apply any permanent inductive or capacitance loads to the circuit without ensuring that this will not exceed the permissible voltage and current permitted for the equipment in use.
   Intrinsically safe components are the only types that can be worked on while live in the presence of a flammable atmosphere. The test apparatus shall be at the correct rating.
   Replace components only with parts specified by the manufacturer. Other parts may result in the ignition of refrigerant in the atmosphere from a leak.
4. Cabling
   Check that cabling will not be subject to wear, corrosion, excessive pressure, vibration, sharp edges or any other adverse environmental effects. The check shall also take into account the effects of aging or continual vibration from sources such as compressors or fans.

5. Detection of Flammable Refrigerants
Under no circumstances shall potential sources of ignition be used in the searching for or detection of refrigerant leaks. A halide torch (or any other detector using a naked flame) shall not be used.

6. Leak Detection Methods
Electronic leak detectors may be used to detect refrigerant leaks but, in the case of flammable refrigerants, the sensitivity may not be adequate, or may need recalibration. (Detection equipment shall be calibrated in a refrigerant-free area.) Ensure that the detector is not a potential source of ignition and is suitable for the refrigerant used. Leak detection equipment shall be set at a percentage of the LFL of the refrigerant and shall be calibrated to the refrigerant employed, and the appropriate percentage of gas (25 % maximum) is confirmed.
Leak detection fluids are suitable for use with most refrigerants but the use of detergents containing chlorine shall be avoided as the chlorine may react with the refrigerant and corrode the copper pipe-work.
If a leak is suspected, all naked flames shall be removed/extinguished.
If a leakage of refrigerant is found which requires brazing, all of the refrigerant shall be recovered from the system, or isolated (by means of shut off valves) in a part of the system remote from the leak. For appliances containing flammable refrigerants, oxygen free nitrogen (OFN) shall then be purged through the system both before and during the brazing process.

7. Removal and Evacuation
When breaking into the refrigerant circuit to make repairs - or for any other purpose conventional procedures shall be used. However, for flammable refrigerants it is important that best practice is followed since flammability is a consideration. The following procedure shall be adhered to:
▪ remove refrigerant
▪ purge the circuit with inert gas
▪ evacuate
▪ purge again with inert gas
▪ open the circuit by cutting or brazing.
The refrigerant charge shall be recovered into the correct recovery cylinders. For appliances containing flammable refrigerants, the system shall be "flushed" with OFN to render the unit safe. This process may need to be repeated several times. Compressed air or oxygen shall not be used for purging refrigerant systems.
For appliances containing flammable refrigerants, flushing shall be achieved by breaking the vacuum in the system with OFN and continuing to fill until the working pressure is achieved, then venting to atmosphere, and finally pulling down to a vacuum. This process shall be repeated until no refrigerant is within the system. When the final OFN charge is used, the system shall be vented down to atmospheric pressure to enable work to take place. This operation is absolutely vital if brazing operations on the pipe-work are to take place.
Ensure that the outlet for the vacuum pump is not close to any ignition sources and that ventilation is available.

8. Charging Procedures
In addition to conventional charging procedures, the following requirements shall be followed:
▪ Ensure that contamination of different refrigerants does not occur when using charging equipment. Hoses or lines shall be as short as possible to minimize the amount of refrigerant contained in them.
▪ Cylinders shall be kept upright.
▪ Ensure that the refrigeration system is earthed prior to charging the system with refrigerant.
▪ Label the system when charging is complete (if not already).
▪ Extreme care shall be taken not to overfill the refrigeration system.
Prior to recharging the system, it shall be pressure-tested with the appropriate purging gas. The system shall be leak-tested on completion of charging but prior to commissioning. A follow up leak test shall be carried out prior to leaving the site.

9. Decommissioning
Before carrying out this procedure, it is essential that the technician is completely familiar with the equipment and all its detail. It is recommended good practice that all refrigerants are recovered safely. Prior to the task being carried out, an oil and refrigerant sample shall be taken in case analysis is required prior to reuse of reclaimed refrigerant. It is essential that electrical power is available before the task is commenced.
(1) Become familiar with the equipment and its operation.
(2) Isolate system electrically.
(3) Before attempting the procedure, ensure that:
▪ mechanical handling equipment is available, if required, for handling refrigerant cylinders;
▪ all personal protective equipment is available and being used correctly;
▪ the recovery process is supervised at all times by a competent person;
▪ recovery equipment and cylinders conform to the appropriate standards.
(4) Pump down refrigerant system, if possible.
(5) If a vacuum is not possible, make a manifold so that refrigerant can be removed from various parts of the system.
(6) Make sure that cylinder is situated on the scales before recovery takes place.
(7) Start the recovery machine and operate in accordance with manufacturer's instructions.
(8) Do not overfill cylinders. (no more than 80 % volume liquid charge).
(9) Do not exceed the maximum working pressure of the cylinder, even temporarily.
(10) When the cylinders have been filled correctly and the process completed, make sure that the cylinders and the equipment are removed from site promptly and all isolation valves on the equipment are closed off.
(11) Recovered refrigerant shall not be charged into another refrigeration system unless it has been cleaned and checked.

10. Labeling
Equipment shall be labeled stating that it has been de-commissioned and emptied of refrigerant. The label shall be dated and signed. For appliances containing flammable refrigerants, ensure that there are labels on the equipment stating the equipment contains flammable refrigerant.

11. Recovery
When removing refrigerant from a system, either for servicing or decommissioning, it is recommended good practice that all refrigerants are removed safely. When transferring refrigerant into cylinders, ensure that only appropriate refrigerant recovery cylinders are employed. Ensure that the correct number of cylinders for holding the total system charge are available. All cylinders to be used are designated for the recovered refrigerant and labeled for that refrigerant (i.e. special cylinders for the recovery of refrigerant). Cylinders shall be complete with pressure-relief valve and associated shut-off valves in good working order. Empty recovery cylinders are evacuated and, if possible, cooled before recovery occurs.
The recovery equipment shall be in good working order with a set of instructions concerning the equipment that is at hand and shall be suitable for the recovery of all appropriate refrigerants including, when applicable, flammable refrigerants. In addition, a set of calibrated weighing scales shall be available and in good working order. Hoses shall be complete with leak-free disconnect couplings and in good condition. Before using the recovery machine, check that it is in satisfactory working order, has been properly maintained and that any associated electrical components are sealed to prevent ignition in the event of a refrigerant release. Consult manufacturer if in doubt.
The recovered refrigerant shall be returned to the refrigerant supplier in the correct recovery cylinder, and the relevant waste transfer note arranged. Do not mix refrigerants in recovery units and especially not in cylinders.
If compressors or compressor oils are to be removed, ensure that they have been evacuated to an acceptable level to make certain that flammable refrigerant does not remain within the lubricant. The evacuation process shall be carried out prior to returning the compressor to the suppliers. Only electric heating to the compressor body shall be employed to accelerate this process. When oil is drained from a system, it shall be carried out safely.

3 PART NAMES AND FUNCTIONS

MUZ-AP25VG
MUZ-AP35VG
MUZ-AP42VG
MUZ-AP25VGH
MUZ-AP35VGH
MUZ-AP42VGH

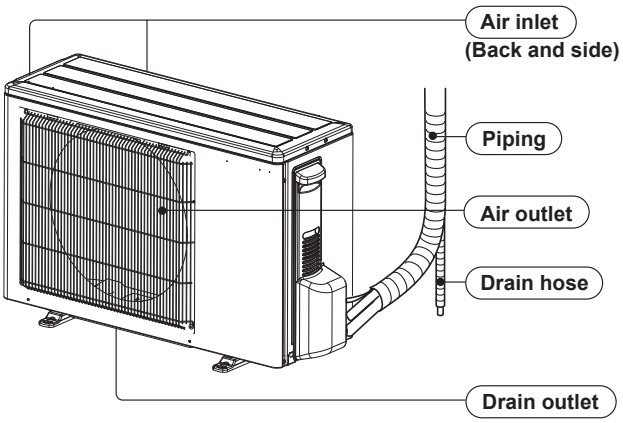

MUZ-AP50VG
MUZ-AP60VG
MUZ-AP50VGH

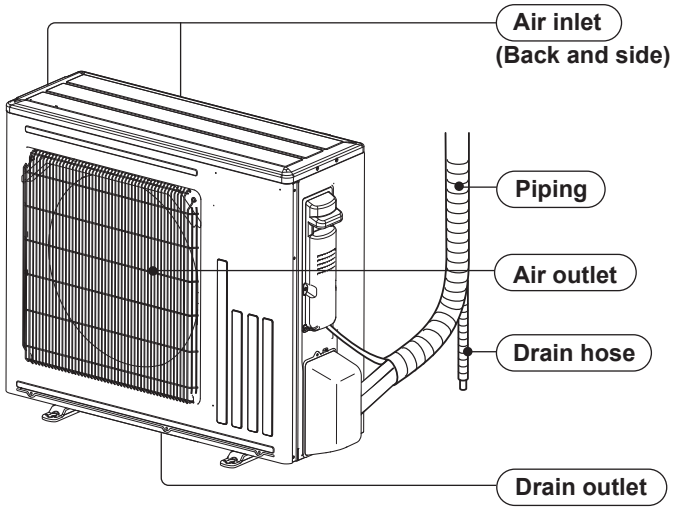

MUZ-AP71VG

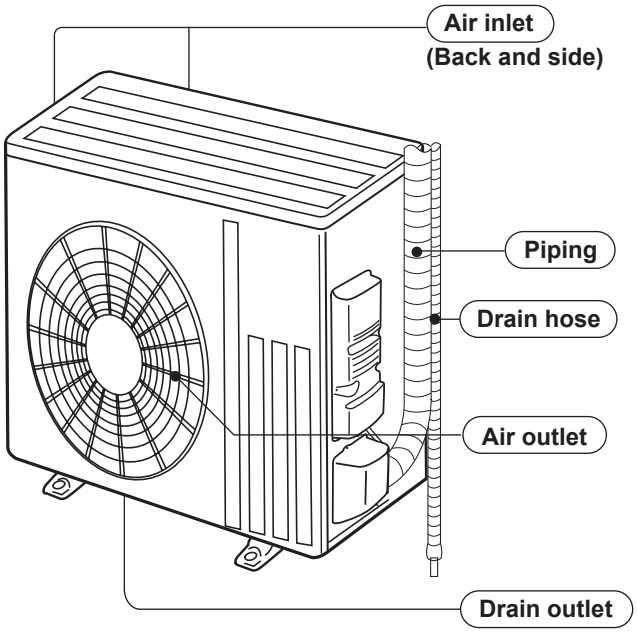

ACCESSORIES

MODELS	MUZ-AP25VG MUZ-AP35VG MUZ-AP42VG MUZ-AP50VG MUZ-AP60VG MUZ-AP71VG
Drain socket	1

4 SPECIFICATION

Outdoor model				MUZ-AP25VG MUZ-AP25VGH	MUZ-AP35VG MUZ-AP35VGH	MUZ-AP42VG MUZ-AP42VGH	MUZ-AP50VG MUZ-AP50VGH
Power supply				Single phase, 230 V, 50 Hz			
Capacity Rated (Min.-Max.)		Cooling	kW	2.5 (0.9 - 3.4)	3.5 (1.1 - 3.8)	4.2 (0.9 - 4.5)	5.0 (1.4 - 5.4)
		Heating		3.2 (1.0 - 4.1)	4.0 (1.3 - 4.6)	5.4 (1.3 - 6.0)	5.8 (1.4 - 7.3)
Breaker Capacity			A	10			16
Electrical data	Power input *1 (Set)	Cooling	W	600	990	1,300	1,550
		Heating		780	1,030	1,490	1,600
	Running current *1 (Set)	Cooling	A	2.9	4.5	5.8	6.9
		Heating		3.6	4.7	6.6	7.0
	Power factor *1 (Set)	Cooling	%	89	95	97	97
		Heating		94	95	98	99
	Starting current *1 (Set)		A	3.6	4.7	6.6	7.0
Coefficient of performance (COP) *1 (Set)		Cooling		4.17	3.54	3.23	3.23
		Heating		4.10	3.88	3.62	3.63
Compressor	Model			E1, ET1, E2, ET2, ER2: KVB073FYXMC E3, ET3, ER3: KVB073FYGMC		SVB130FBBMC	SVB130FBBMT
	Output		W	470	470	900	900
	Current *1	Cooling	A	2.50	4.10	5.42	6.39
		Heating		3.14	4.20	6.05	6.41
	Refrigeration oil (Model)		L	0.27 (FW68S)		0.35 (FW68S)	
Fan motor	Model			E1, ET1: RC0J50-NC E2, ET2, ER2, E3, ET3, ER3: RC0J55-DC			RC0J50-RA
	Current *1	Cooling	A	0.22	0.22	0.20	0.27
		Heating		0.20	0.24	0.23	0.27
Dimensions W × H × D			mm	800 × 550 × 285			800 × 714 × 285
Weight			kg	E1, ET1, E2, ET2, ER2:31		35	40
				E3, ET3, ER3: 27	E3, ET3, ER3: 29		
Special remarks	Dehumidification		Cooling L/h	0.3	0.6	1.4	1.9
	Airflow *1	Cooling	High	2,178	2,178	2,058	2,430
			Low	1,038	1,038	906	1,320
		Heating	High	2,076	2,076	1,962	2,430
			Med.	1,788	1,788	1,686	2,238
			Low	1,452	1,452	1,260	1,704
	Sound level *1		Cooling	47	49	50	52
			Heating	48	50	51	52
	Fan speed	Cooling	High	940	940	940	840
			Low	470	470	460	490
		Heating	High	900	900	900	840
			Med.	780	780	780	780
			Low	640	640	600	610
	Fan speed regulator			3			
	Refrigerant filling capacity (R32)		kg	0.55	0.55	0.70	1.00

NOTE: Test conditions are based on ISO 5151.

Cooling: Indoor Dry-bulb temperature 27°C Wet-bulb temperature 19°C
Outdoor Dry-bulb temperature 35°C Wet-bulb temperature 24°C
Heating: Indoor Dry-bulb temperature 20°C
Outdoor Dry-bulb temperature 7°C Wet-bulb temperature 6°C
Refrigerant piping length (one way): 5 m
*1 Measured under rated operating frequency.

Outdoor model					MUZ-AP60VG	MUZ-AP71VG
Power supply					Single phase, 230 V, 50 Hz	
Capacity Rated (Min.-Max.)			Cooling	kW	6.1 (1.4 - 7.3)	7.1 (2.0 - 8.7)
			Heating		6.8 (2.0 - 8.6)	8.0 (2.2 - 10.3)
Breaker Capacity				A	16	20
Electrical data	Power input *1 (Set)		Cooling	W	1,590	2,010
			Heating		1,670	2,120
	Running current *1 (Set)		Cooling	A	7.10	8.80
			Heating		7.40	9.30
	Power factor *1 (Set)		Cooling	%	97	99
			Heating		98	99
	Starting current *1 (Set)			A	7.4	9.3
Coefficient of performance (COP) *1 (Set)			Cooling		3.84	3.53
			Heating		4.07	3.82
Compressor	Model				SVB130FBBMT	SVB172FCKMT
	Output			W	900	1,200
	Current *1		Cooling	A	6.23	7.49
			Heating		6.47	8.02
	Refrigeration oil (Model)			L	0.35 (FW68S)	0.40 (FW68S)
Fan motor	Model				RC0J50-RA	RC0J77-AG
	Current *1		Cooling	A	0.50	0.93
			Heating		0.50	0.88
Dimensions W × H × D				mm	800 × 714 × 285	840 × 880 × 330
Weight				kg	40	55
Special remarks	Dehumidification		Cooling	L/h	1.5	2.4
	Airflow *1	Cooling	High	m^3/h	3,126	3,246
			Med.		2,748	2,958
			Low		1,320	1,566
		Heating	High		3,126	2,958
			Med.		2,238	2,874
			Low		1,704	2,334
	Sound level *1		Cooling	dB(A)	56	
			Heating		57	55
	Fan speed	Cooling	High	rpm	1,060	950
			Med.		940	840
			Low		490	450
		Heating	High		1,060	840
			Med.		780	810
			Low		610	650
	Fan speed regulator				3	
	Refrigerant filling capacity (R32)			kg	1.05	1.50

NOTE: Test conditions are based on ISO 5151.

Cooling: Indoor Dry-bulb temperature 27°C Wet-bulb temperature 19°C
Outdoor Dry-bulb temperature 35°C Wet-bulb temperature 24°C
Heating: Indoor Dry-bulb temperature 20°C
Outdoor Dry-bulb temperature 7°C Wet-bulb temperature 6°C

*1 Measured under rated operating frequency.

Specifications and rated conditions of main electric parts

Item	Model	MUZ-AP25VG	MUZ-AP25VGH	MUZ-AP35VG	MUZ-AP35VGH	MUZ-AP42VG	MUZ-AP42VGH	MUZ-AP50VG	MUZ-AP50VGH
Smoothing capacitor	(C61)	—				600 µF/ 620 µF 420 V			
	(C62, C63)	600 µF/ 620 µF 420 V							
Diode module	(DB61)	15 A 600 V						25 A 600 V	
	(DB65)	25 A 600 V							
Fuse	(F61)	25A 250V							
	(F62)	15A 250V							
	(F701, F801, F901)	T3.15AL250V							
Defrost heater	(H)	—	230 V 60W	—	230 V 60W	—	230 V 60W	—	230 V 130W
Power module	(IC700)	15 A 600 V				20 A 600 V			
	(IC932)	5 A 600 V							
Expansion valve coil	(LEV)	12 V DC							
Reactor	(L61)	18 mH		23 mH					
Switch power transistor	(Q821)	30 A/37 A 600 V							
Circuit protection	(PTC64, PTC65)	33 Ω							
Terminal block	(TB1)	5 P							
Relay	(X63)	3 A 250 V							
	(X64)	20 A 250 V							
	(X66)	—	3 A 250 V	—	3 A 250 V	—	3 A 250 V	—	3 A 250 V
	(X69)	10 A 230 V							
R.V.coil	(21S4)	220 - 240 V AC							
Heater protector	(26H)	—	Open 45°C	—	Open 45°C	—	Open 45°C	—	Open 45°C

Item	Model	MUZ-AP60VG
Smoothing capacitor	(C61, C62, C63)	600 µF/ 620 µF 420 V
Diode module	(DB61)	25 A 600 V
	(DB65)	25 A 600 V
Fuse	(F61)	25A 250V
	(F62)	15A 250V
	(F701, F801,F901)	T3.15AL250V
Power module	(IC700)	20 A 600 V
	(IC932)	5 A 600 V
Expansion valve coil	(LEV)	12 V DC
Reactor	(L61)	23 mH
Switch power transistor	(Q821)	30 A 600 V
Circuit protection	(PTC64, PTC65)	33 Ω
Terminal block	(TB1)	5 P
Relay	(X63)	3 A 250 V
	(X64)	20 A 250 V
	(X69)	10 A 230 V
R.V.coil	(21S4)	220 - 240 V AC

Item	Model	MUZ-AP71VG
Smoothing capacitor	(CB1, CB2, CB3)	560 µF 450 V
Fuse	(F601, F880, F901)	T3.15AL250V
Switching power transistor	(Q3A, Q3B)	21 A 650 V
Power module	(IC932)	5 A 600 V
	(IC700)	20 A 600 V
Expansion valve coil	(LEV)	12 V DC
Reactor	(L)	282 µH
Diode	(D3A, D3B)	20 A 600 V
Diode module	(DB41A, DB41B)	20 A 600 V
Circuit protection	(PTC64, PTC65)	33 Ω
Terminal block	(TB1, TB2)	3 P
Relay	(X64)	20 A 250 V
	(X65)	20 A 250 V
	(X69)	10 A 250 V
	(X601)	3 A 250 V
	(X602)	3 A 250 V
R.V. coil	(21S4)	220-240 V AC

5 NOISE CRITERIA CURVES

MUZ-AP25VG
MUZ-AP25VGH

FUNCTION	SPL(dB(A))	LINE
COOLING	47	●——●
HEATING	48	○——○

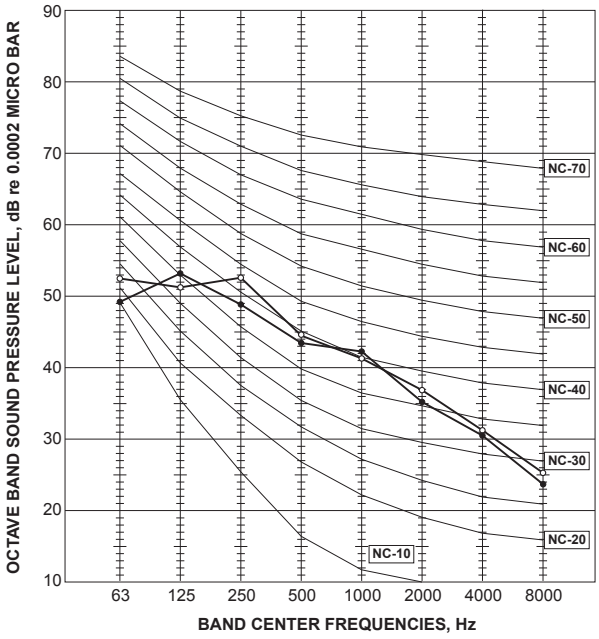

MUZ-AP35VG
MUZ-AP35VGH

FUNCTION	SPL(dB(A))	LINE
COOLING	49	●——●
HEATING	50	○——○

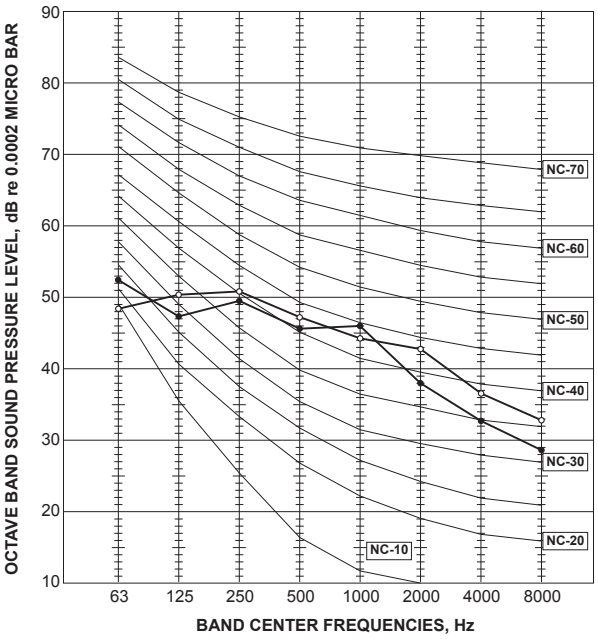

MUZ-AP42VG
MUZ-AP42VGH

FUNCTION	SPL(dB(A))	LINE
COOLING	50	●——●
HEATING	51	○——○

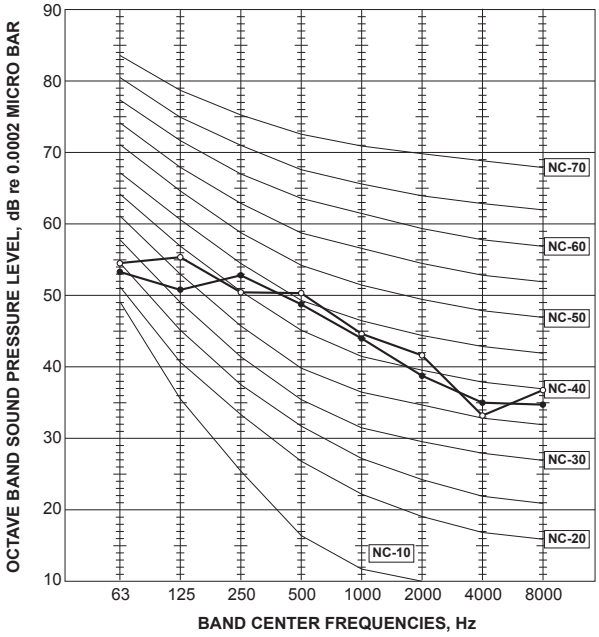

MUZ-AP50VG
MUZ-AP50VGH

FUNCTION	SPL(dB(A))	LINE
COOLING	52	●——●
HEATING	52	○——○

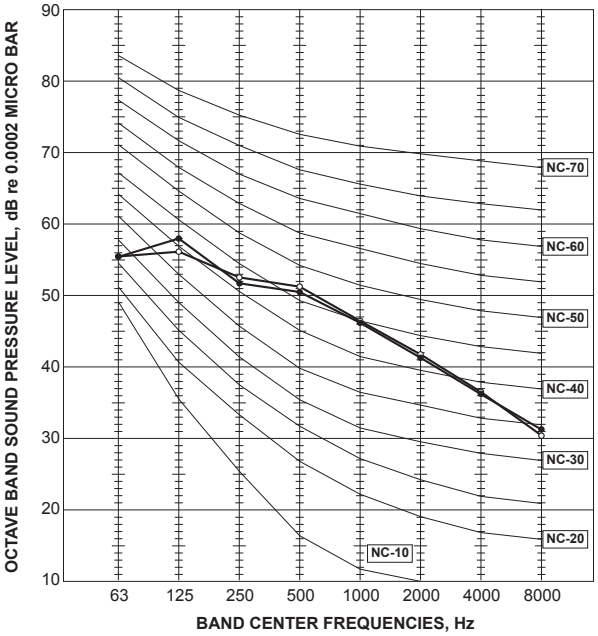

MUZ-AP60VG

FUNCTION	SPL(dB(A))	LINE
COOLING	56	●——●
HEATING	57	○——○

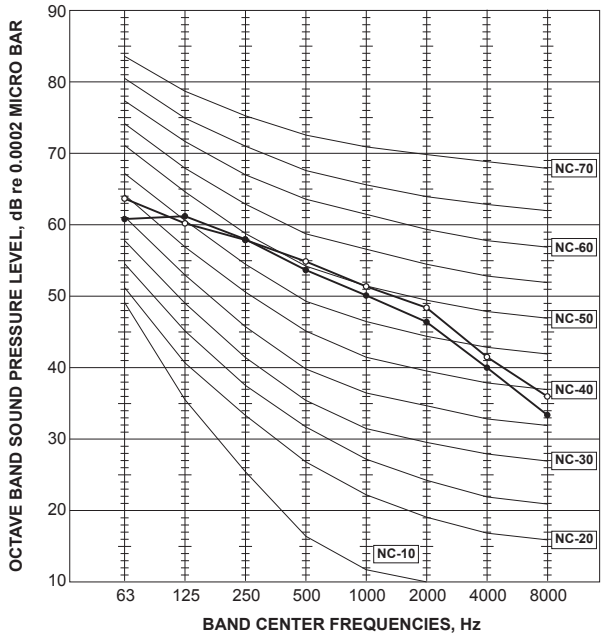

MUZ-AP71VG

FUNCTION	SPL(dB(A))	LINE
COOLING	56	●——●
HEATING	55	○——○

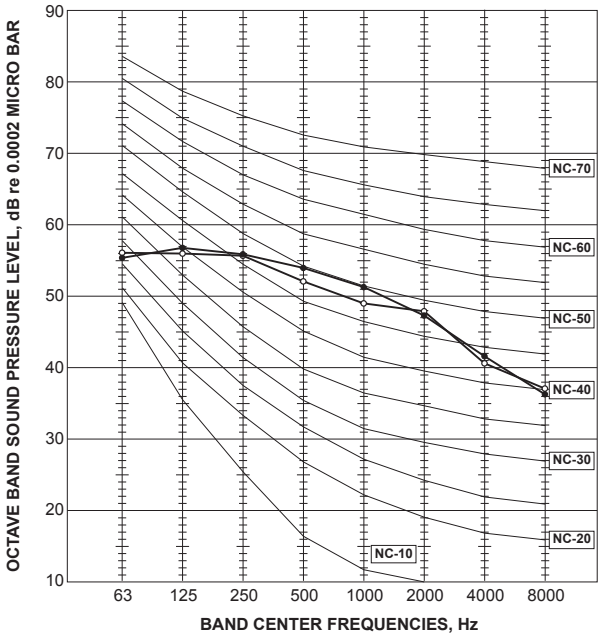

Test conditions

Cooling: Dry-bulb temperature 35°C Wet-bulb temperature 24°C
Heating: Dry-bulb temperature 7°C Wet-bulb temperature 6°C

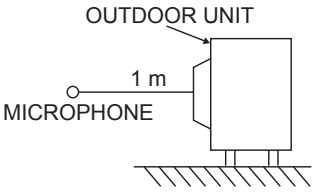

6 OUTLINES AND DIMENSIONS

MUZ-AP25VG MUZ-AP35VG MUZ-AP42VG
MUZ-AP25VGH MUZ-AP35VGH MUZ-AP42VGH

Unit: mm

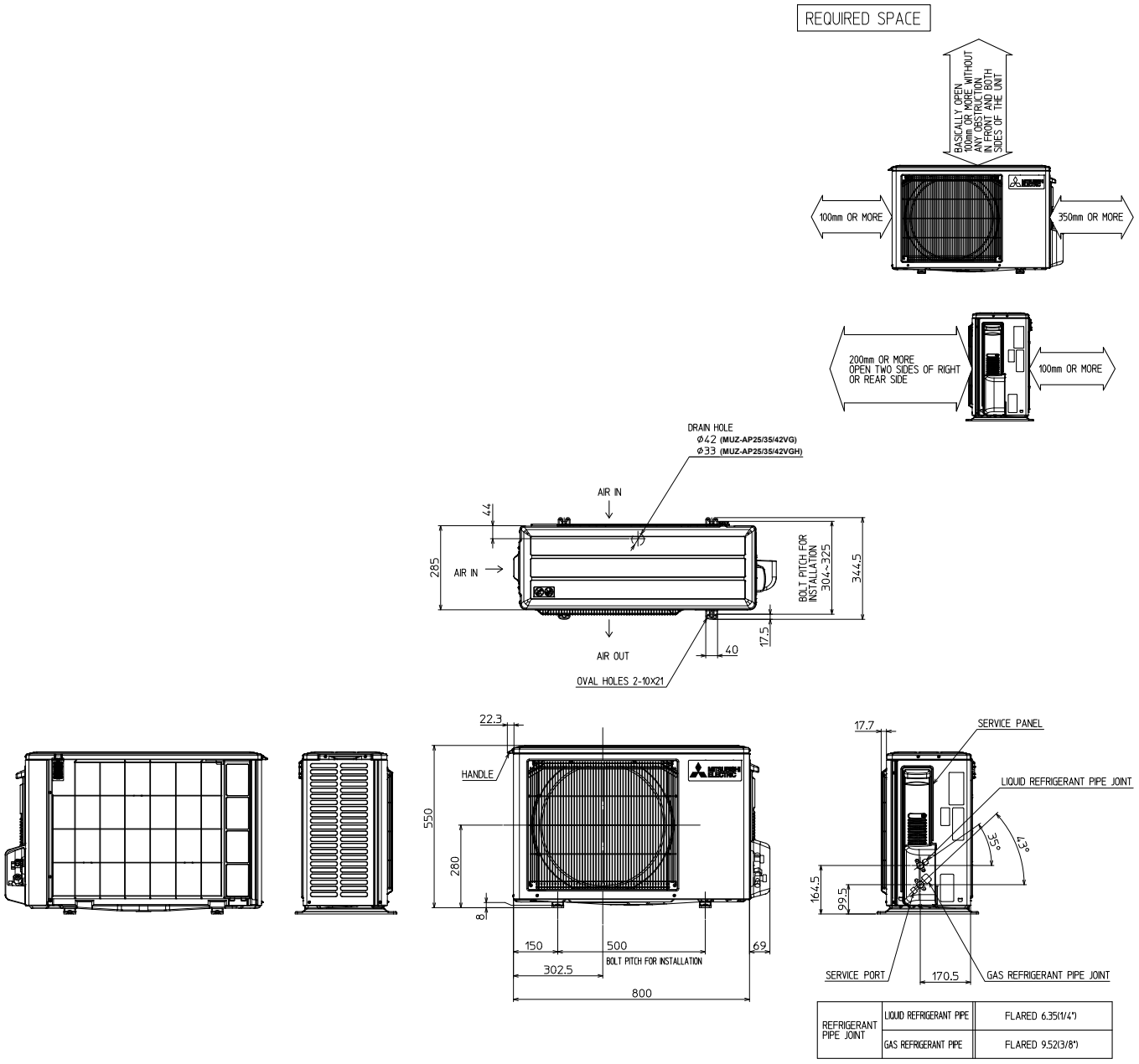

REFRIGERANT PIPE JOINT	LIQUID REFRIGERANT PIPE	FLARED 6.35(1/4")
	GAS REFRIGERANT PIPE	FLARED 9.52(3/8")

MUZ-AP50VG MUZ-AP60VG
MUZ-AP50VGH

Unit: mm

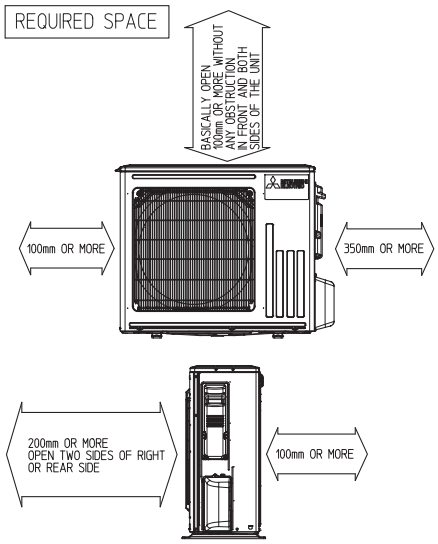

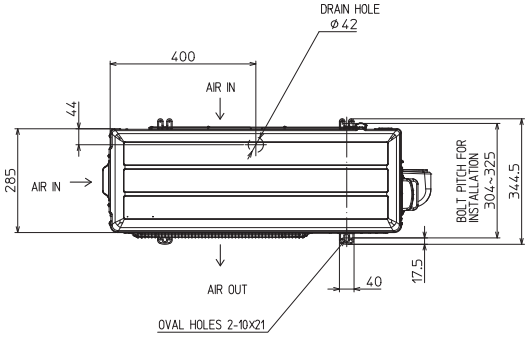

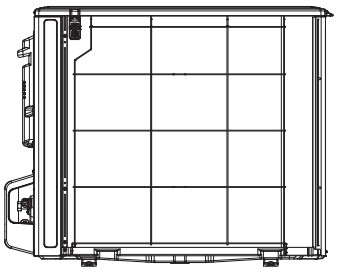

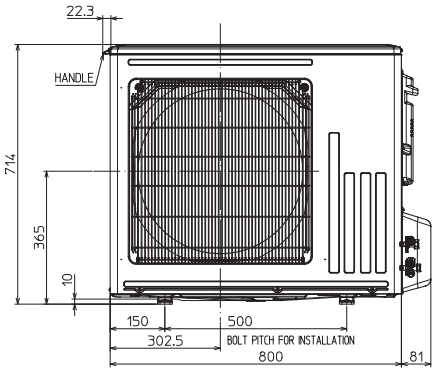

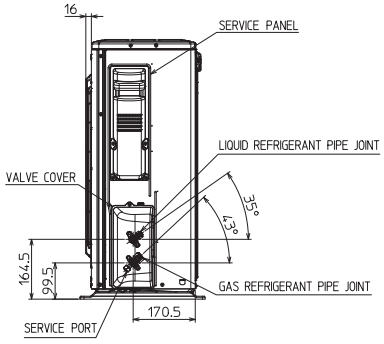

MUZ-AP50VG, MUZ-AP50VGH

REFRIGERANT PIPE JOINT	LIQUID REFRIGERANT PIPE	FLARED 6.35(1/4")
	GAS REFRIGERANT PIPE	FLARED 9.52(3/8")

MUZ-AP60VG

REFRIGERANT PIPE JOINT	LIQUID REFRIGERANT PIPE	FLARED 6.35(1/4")
	GAS REFRIGERANT PIPE	FLARED12.7(1/2")

MUZ-AP71VG

Unit: mm

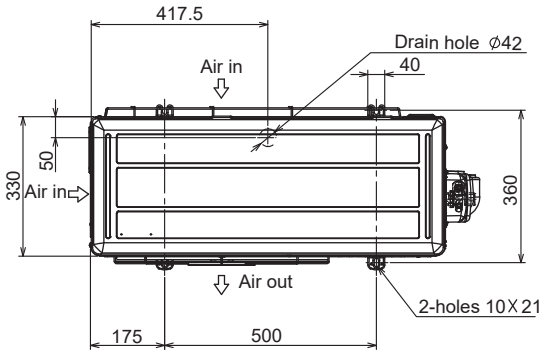

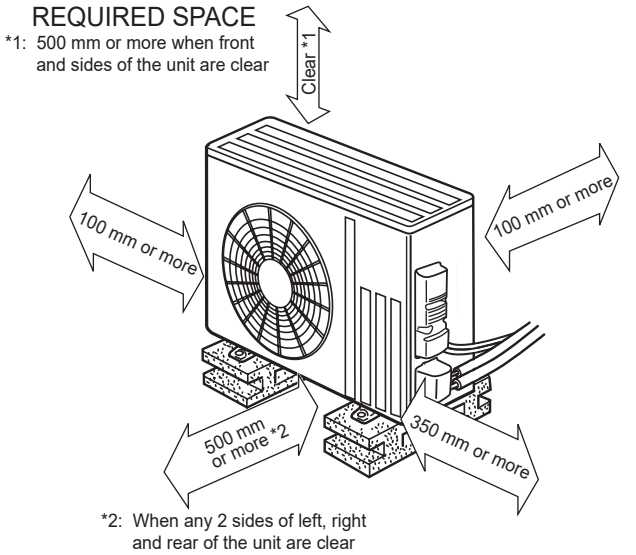

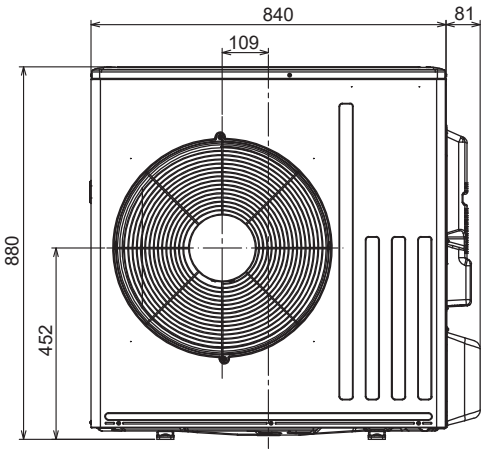

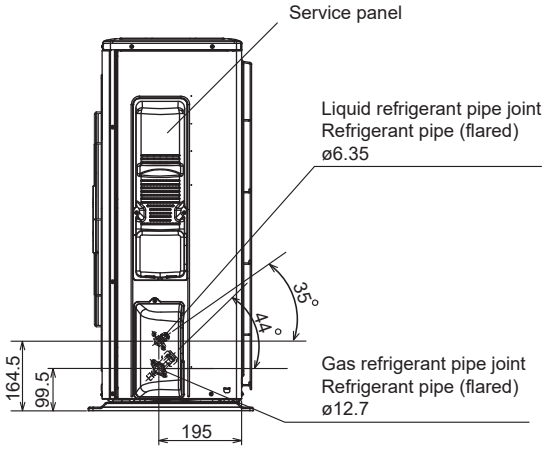

7 WIRING DIAGRAM

MUZ-AP25VG -E1, E2, ER2, E3, ER3 MUZ-AP35VG -E1, E2, ER2, E3, ER3

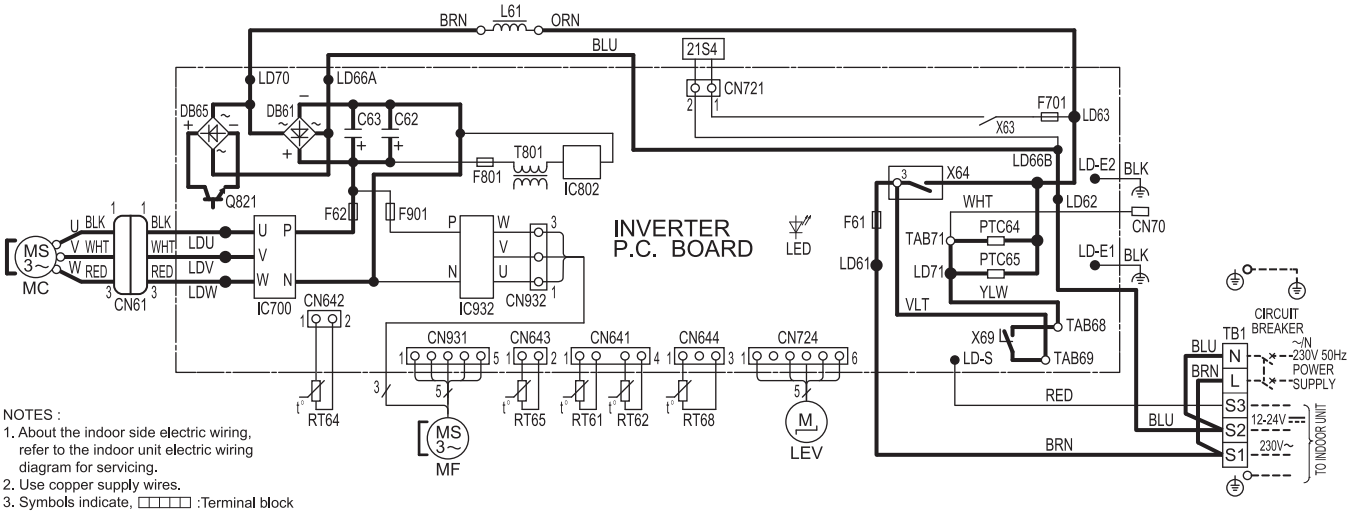

NOTES :
1. About the indoor side electric wiring, refer to the indoor unit electric wiring diagram for servicing.
2. Use copper supply wires.
3. Symbols indicate, ▭▭▭▭ :Terminal block
   ○○○○○ :Connector

SYMBOL	NAME	SYMBOL	NAME	SYMBOL	NAME
CN61	CONNECTOR	LEV	EXPANSION VALVE COIL	RT65	AMBIENT TEMP. THERMISTOR
C62,C63	SMOOTHING CAPACITOR	L61	REACTOR	RT68	OUTDOOR HEAT EXCHANGER TEMP. THERMISTOR
DB61,DB65	DIODE MODULE	MC	COMPRESSOR		
F61	FUSE (25A 250V)	MF	FAN MOTOR	TB1	TERMINAL BLOCK
F62	FUSE (15A 250V)	PTC64,PTC65	CIRCUIT PROTECTION	T801	TRANSFORMER
F701,F801,F901	FUSE (T3. 15AL250V)	Q821	SWITCHING POWER TRANSISTOR	X63,X64,X69	RELAY
IC700,IC932	POWER MODULE	RT61	DEFROST THERMISTOR	21S4	REVERSING VALVE COIL
IC802	POWER DEVICE	RT62	DISCHARGE TEMP. THERMISTOR		
LED	LED	RT64	FIN TEMP. THERMISTOR		

MUZ-AP25VG -ET1, ET2, ET3 MUZ-AP35VG -ET1, ET2, ET3

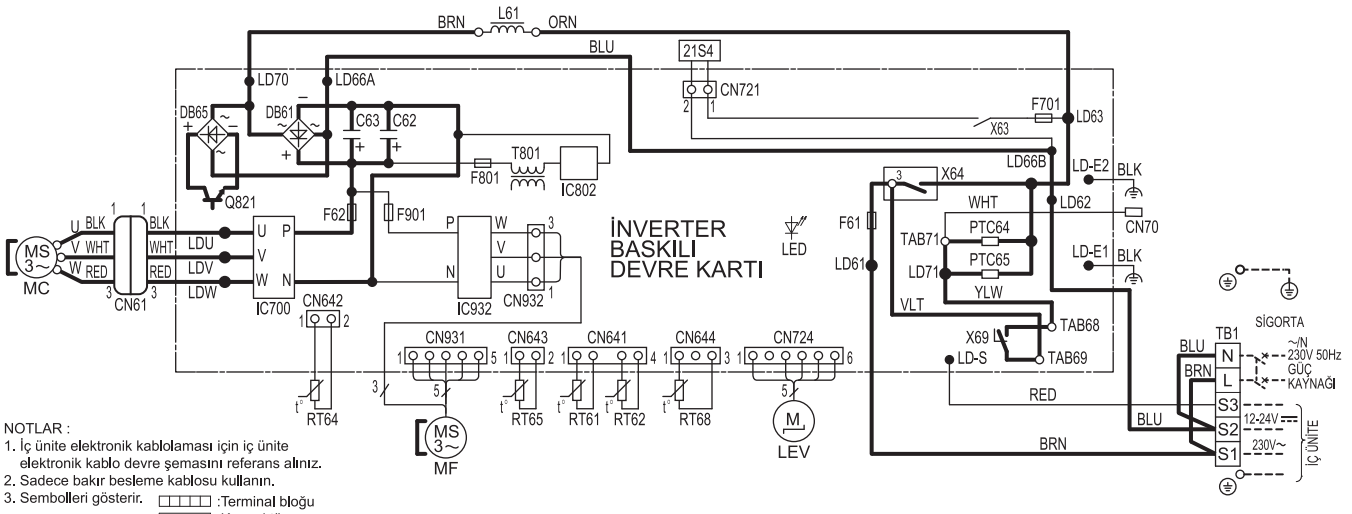

NOTLAR :
1. İç ünite elektronik kablolaması için iç ünite elektronik kablo devre şemasını referans alınız.
2. Sadece bakır besleme kablosu kullanın.
3. Sembolleri gösterir. ▭▭▭▭ :Terminal bloğu
   ○○○○○ :Konnektör

SEMBOL	PARÇA ADI	SEMBOL	PARÇA ADI	SEMBOL	PARÇA ADI
CN61	KONNEKTÖR	LEV	GENLEŞME VANASI SARGISI	RT65	ORTAM SICAKLIK TERMİSTÖRÜ
C62,C63	KAPASİTÖR	L61	REAKTÖR	RT68	DIŞ ÜNİTE EŞANJÖR SICAKLIK TERMİSTÖRÜ
DB61,DB65	DİYOT MODÜLÜ	MC	KOMPRESÖR		
F61	SİGORTA (25A 250V)	MF	FAN MOTORU	TB1	TERMİNAL BLOĞU
F62	SİGORTA (15A 250V)	PTC64,PTC65	DEVRE KORUMASI	T801	TRANSFORMATÖR
F701,F801,F901	SİGORTA (T3. 15AL250V)	Q821	SİVİÇLİ GÜÇ TRANSİSTÖRÜ	X63,X64,X69	RÖLE
IC700,IC932	GÜÇ MODÜLÜ	RT61	DEFROST TERMİSTÖRÜ	21S4	4 YOLLU VANA SARGISI
IC802	GÜÇ CİHAZI	RT62	BASMA SICAKLIK TERMİSTÖRÜ		
LED	LED	RT64	FİN SICAKLIK TERMİSTÖRÜ		

MUZ-AP25VGH -E1, E2, E3 MUZ-AP35VGH -E1, E2, E3

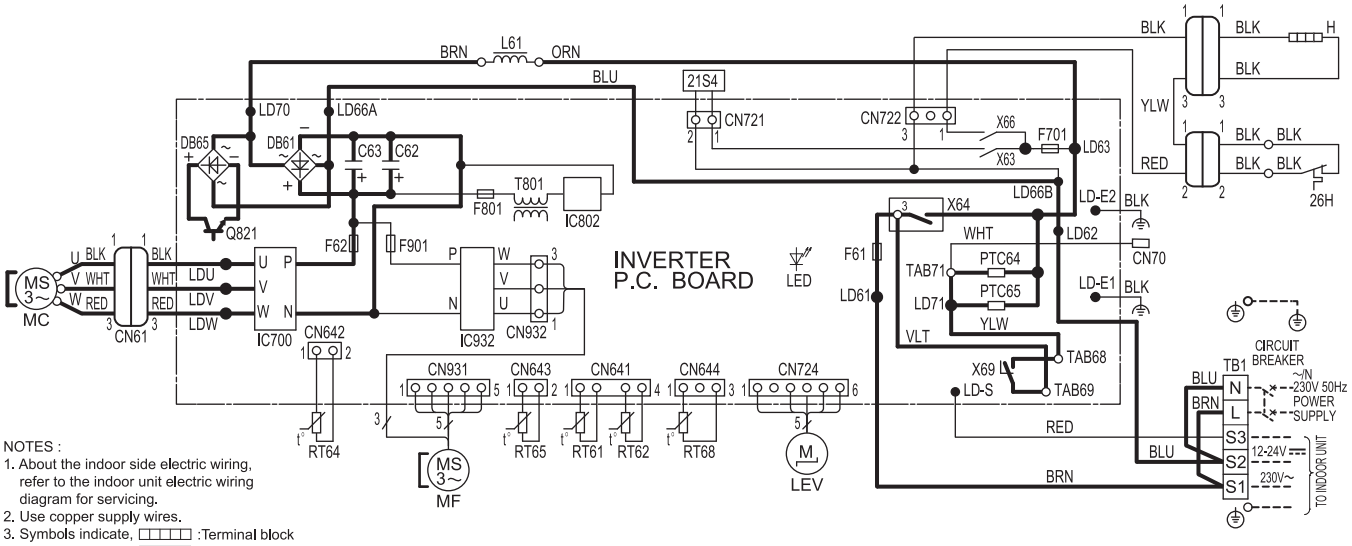

SYMBOL	NAME	SYMBOL	NAME	SYMBOL	NAME
CN61	CONNECTOR	LED	LED	RT64	FIN TEMP. THERMISTOR
C62,C63	SMOOTHING CAPACITOR	LEV	EXPANSION VALVE COIL	RT65	AMBIENT TEMP. THERMISTOR
DB61,DB65	DIODE MODULE	L61	REACTOR	RT68	OUTDOOR HEAT EXCHANGER TEMP. THERMISTOR
F61	FUSE (25A 250V)	MC	COMPRESSOR		
F62	FUSE (15A 250V)	MF	FAN MOTOR	TB1	TERMINAL BLOCK
F701,F801,F901	FUSE (T3. 15AL250V)	PTC64,PTC65	CIRCUIT PROTECTION	T801	TRANSFORMER
H	DEFROST HEATER	Q821	SWITCHING POWER TRANSISTOR	X63,X64,X66,X69	RELAY
IC700,IC932	POWER MODULE	RT61	DEFROST THERMISTOR	21S4	REVERSING VALVE COIL
IC802	POWER DEVICE	RT62	DISCHARGE TEMP. THERMISTOR	26H	HEATER PROTECTOR

MUZ-AP42VG - E1, E2, ER2

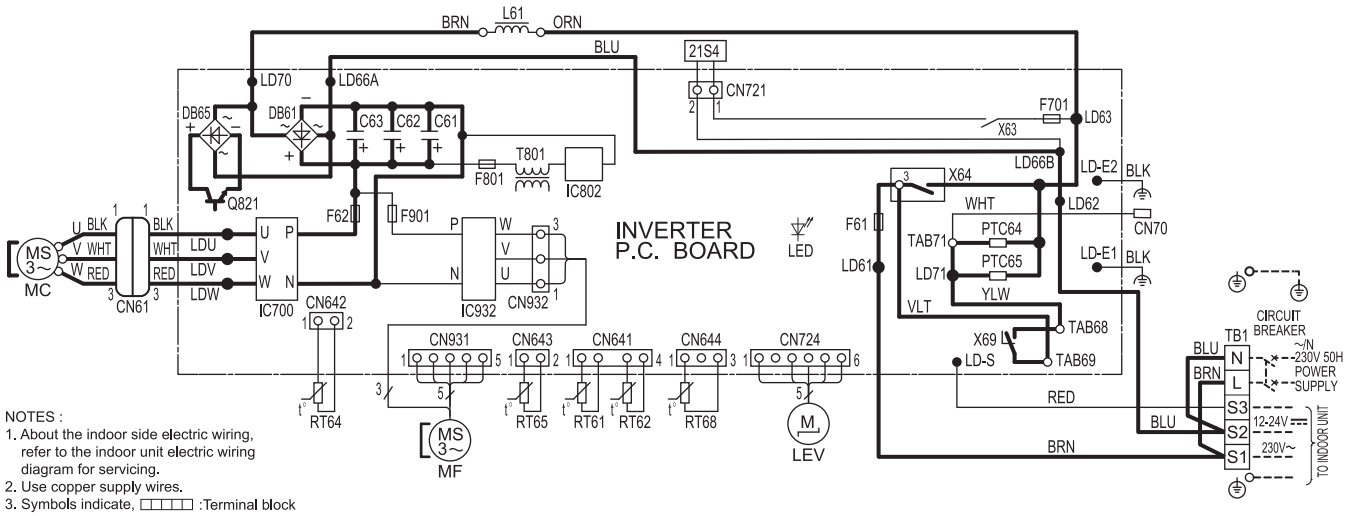

SYMBOL	NAME	SYMBOL	NAME	SYMBOL	NAME
CN61	CONNECTOR	LEV	EXPANSION VALVE COIL	RT65	AMBIENT TEMP. THERMISTOR
C61,C62,C63	SMOOTHING CAPACITOR	L61	REACTOR	RT68	OUTDOOR HEAT EXCHANGER TEMP. THERMISTOR
DB61,DB65	DIODE MODULE	MC	COMPRESSOR		
F61	FUSE (25A 250V)	MF	FAN MOTOR	TB1	TERMINAL BLOCK
F62	FUSE (15A 250V)	PTC64,PTC65	CIRCUIT PROTECTION	T801	TRANSFORMER
F701,F801,F901	FUSE (T3. 15AL250V)	Q821	SWITCHING POWER TRANSISTOR	X63,X64,X69	RELAY
IC700,IC932	POWER MODULE	RT61	DEFROST THERMISTOR	21S4	REVERSING VALVE COIL
IC802	POWER DEVICE	RT62	DISCHARGE TEMP. THERMISTOR		
LED	LED	RT64	FIN TEMP. THERMISTOR		

MUZ-AP42VG - ET1, ET2

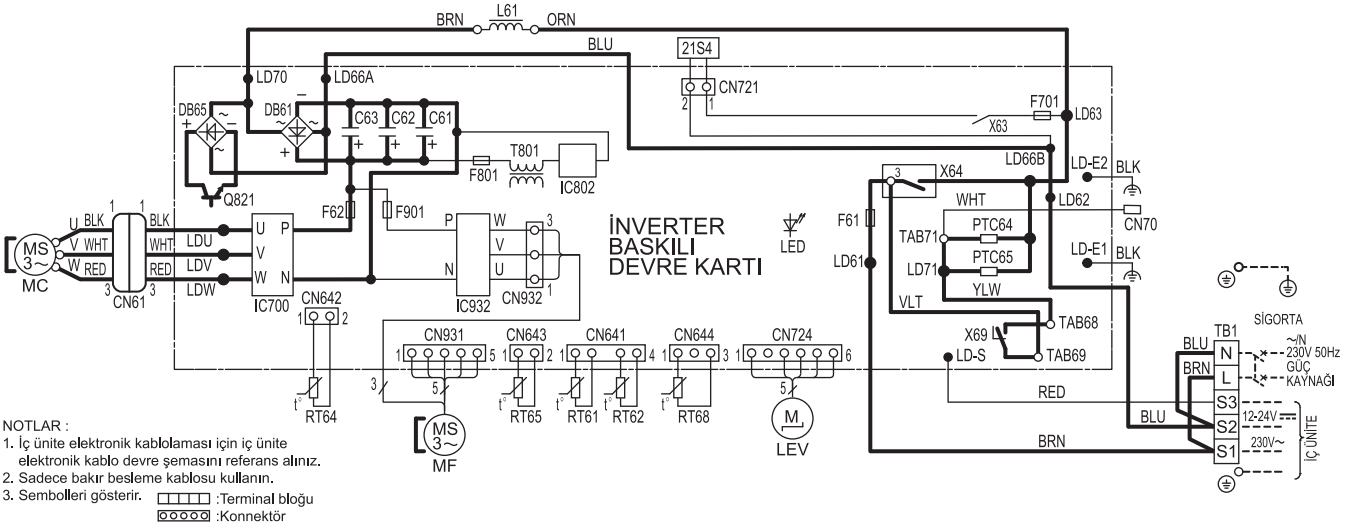

SEMBOL	PARÇA ADI	SEMBOL	PARÇA ADI	SEMBOL	PARÇA ADI
CN61	KONNEKTÖR	LEV	GENLEŞME VANASI SARGISI	RT65	ORTAM SICAKLIK TERMİSTÖRÜ
C61,C62,C63	KAPASİTÖR	L61	REAKTÖR	RT68	DIŞ ÜNİTE EŞANJÖR SICAKLIK TERMİSTÖRÜ
DB61,DB65	DİYOT MODÜLÜ	MC	KOMPRESÖR		
F61	SİGORTA (25A 250V)	MF	FAN MOTORU	TB1	TERMİNAL BLOĞU
F62	SİGORTA (15A 250V)	PTC64,PTC65	DEVRE KORUMASI	T801	TRANSFORMATÖR
F701,F801,F901	SİGORTA (T3. 15AL250V)	Q821	SİVİÇLİ GÜÇ TRANSİSTÖRÜ	X63,X64,X69	RÖLE
IC700,IC932	GÜÇ MODÜLÜ	RT61	DEFROST TERMİSTÖRÜ	21S4	4 YOLLU VANA SARGISI
IC802	GÜÇ CİHAZI	RT62	BASMA SICAKLIK TERMİSTÖRÜ		
LED	LED	RT64	FİN SICAKLIK TERMİSTÖRÜ		

MUZ-AP42VGH -E1, E2

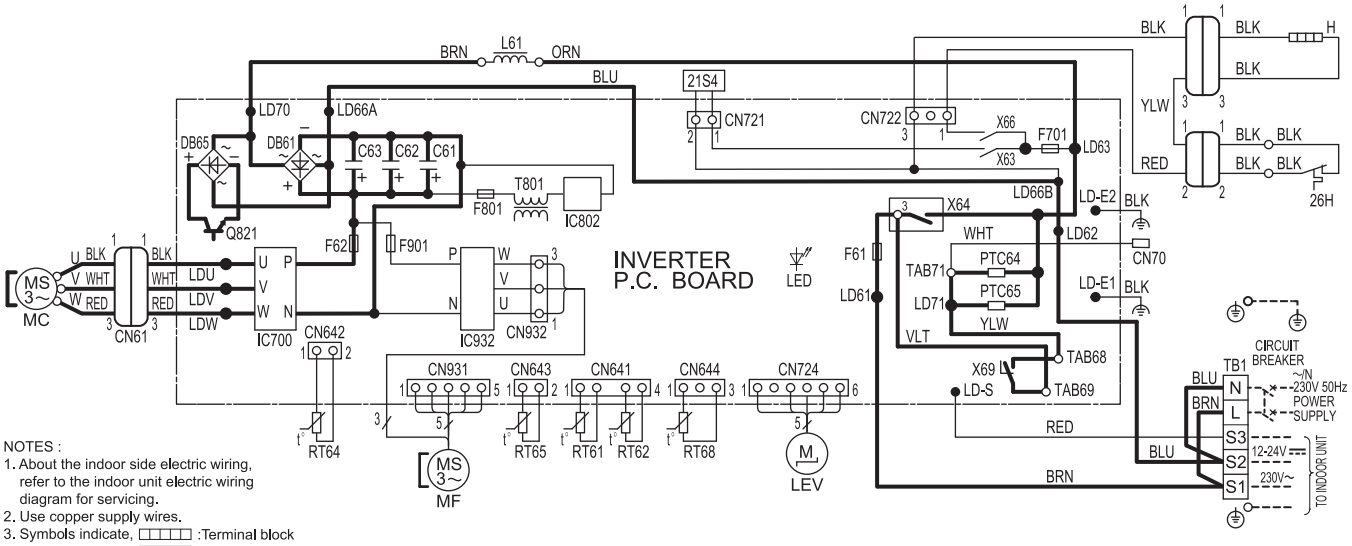

NOTES :
1. About the indoor side electric wiring, refer to the indoor unit electric wiring diagram for servicing.
2. Use copper supply wires.
3. Symbols indicate, ▭ :Terminal block
   ⊙⊙⊙⊙⊙ :Connector

SYMBOL	NAME	SYMBOL	NAME	SYMBOL	NAME
CN61	CONNECTOR	LED	LED	RT64	FIN TEMP. THERMISTOR
C61,C62,C63	SMOOTHING CAPACITOR	LEV	EXPANSION VALVE COIL	RT65	AMBIENT TEMP. THERMISTOR
DB61,DB65	DIODE MODULE	L61	REACTOR	RT68	OUTDOOR HEAT EXCHANGER TEMP. THERMISTOR
F61	FUSE (25A 250V)	MC	COMPRESSOR		
F62	FUSE (15A 250V)	MF	FAN MOTOR	TB1	TERMINAL BLOCK
F701,F801,F901	FUSE (T3. 15AL250V)	PTC64,PTC65	CIRCUIT PROTECTION	T801	TRANSFORMER
H	DEFROST HEATER	Q821	SWITCHING POWER TRANSISTOR	X63,X64,X66,X69	RELAY
IC700,IC932	POWER MODULE	RT61	DEFROST THERMISTOR	21S4	REVERSING VALVE COIL
IC802	POWER DEVICE	RT62	DISCHARGE TEMP. THERMISTOR	26H	HEATER PROTECTOR

MUZ-AP50VG - E1, ER1, E2

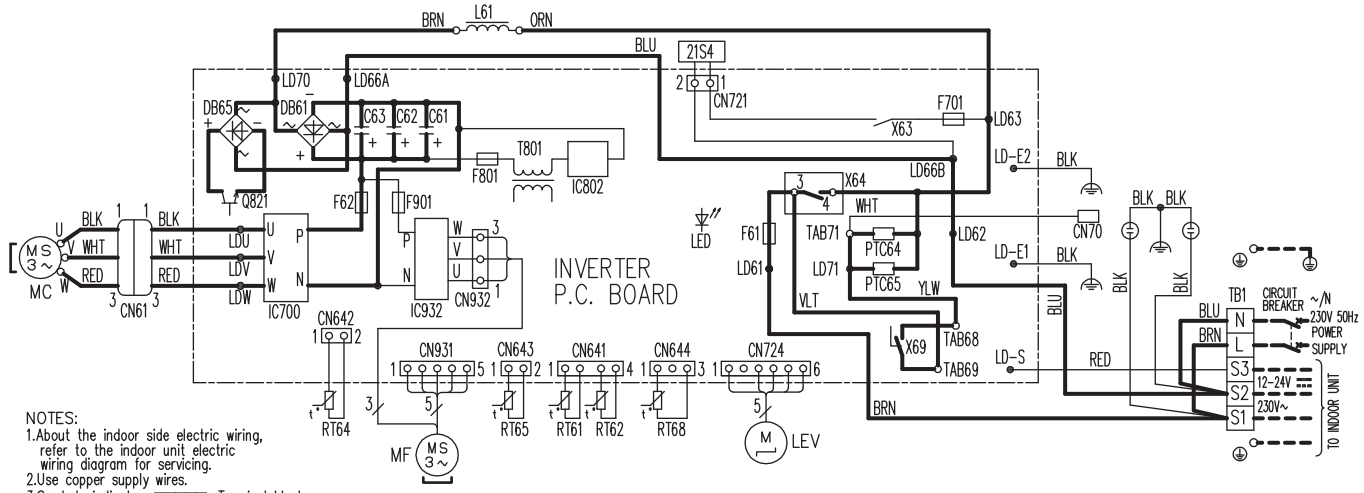

SYMBOL	NAME	SYMBOL	NAME	SYMBOL	NAME
CN61	CONNECTOR	LEV	EXPANSION VALVE COIL	RT65	AMBIENT TEMP. THERMISTOR
C61,C62,C63	SMOOTHING CAPACITOR	L61	REACTOR	RT68	OUTDOOR HEAT EXCHANGER TEMP. THERMISTOR
DB61,DB65	DIODE MODULE	MC	COMPRESSOR		
F61	FUSE (25A 250V)	MF	FAN MOTOR	TB1	TERMINAL BLOCK
F62	FUSE (15A 250V)	PTC64,PTC65	CIRCUIT PROTECTION	T801	TRANSFORMER
F701,F801,F901	FUSE (T3.15AL250V)	Q821	SWITCHING POWER TRANSISTOR	X63,X64,X69	RELAY
IC700,IC932	POWER MODULE	RT61	DEFROST THERMISTOR	21S4	REVERSING VALVE COIL
IC802	POWER DEVICE	RT62	DISCHARGE TEMP. THERMISTOR		
LED	LED	RT64	FIN TEMP. THERMISTOR		

MUZ-AP50VG - ET1

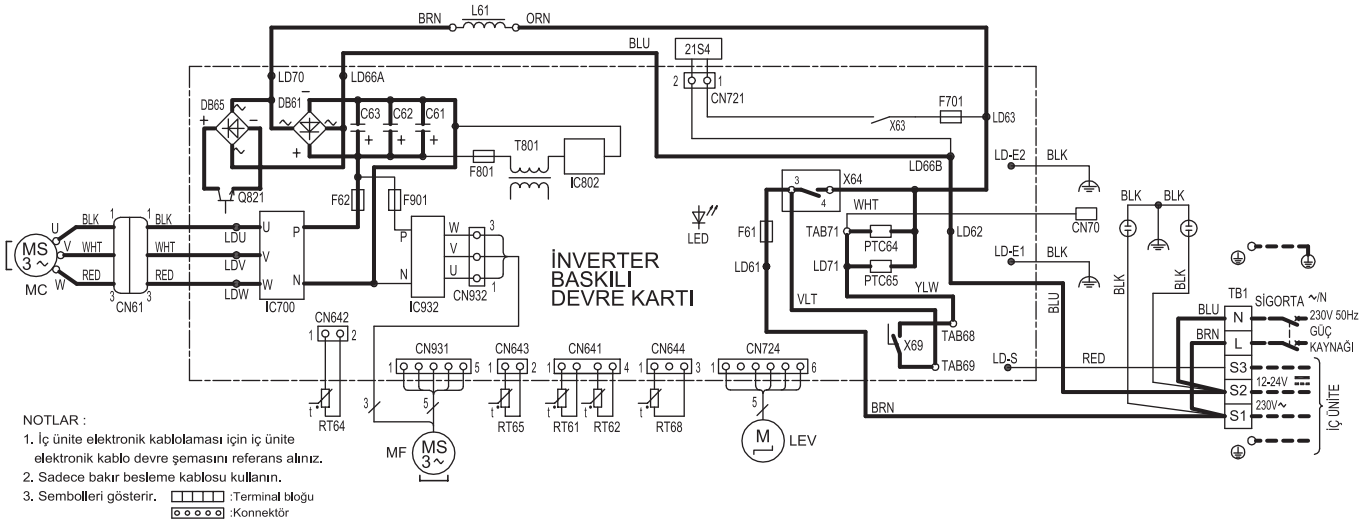

SEMBOL	PARÇA ADI	SEMBOL	PARÇA ADI	SEMBOL	PARÇA ADI
CN61	KONNEKTÖR	LEV	GENLEŞME VANASI SARGISI	RT65	ORTAM SICAKLIK TERMİSTÖRÜ
C61,C62,C63	KAPASİTÖR	L61	REAKTÖR	RT68	DIŞ ÜNİTE EŞANJÖR SICAKLIK TERMİSTÖRÜ
DB61,DB65	DİYOT MODÜLÜ	MC	KOMPRESÖR		
F61	SİGORTA (25A 250V)	MF	FAN MOTORU	TB1	TERMİNAL BLOĞU
F62	SİGORTA (15A 250V)	PTC64,PTC65	DEVRE KORUMASI	T801	TRANSFORMATÖR
F701,F801,F901	SİGORTA (T3. 15AL250V)	Q821	SİVİÇLİ GÜÇ TRANSİSTÖRÜ	X63,X64,X69	RÖLE
IC700,IC932	GÜÇ MODÜLÜ	RT61	DEFROST TERMİSTÖRÜ	21S4	4 YOLLU VANA SARGISI
IC802	GÜÇ CİHAZI	RT62	BASMA SICAKLIK TERMİSTÖRÜ		
LED	LED	RT64	FİN SICAKLIK TERMİSTÖRÜ		

MUZ-AP50VGH -E1, E2

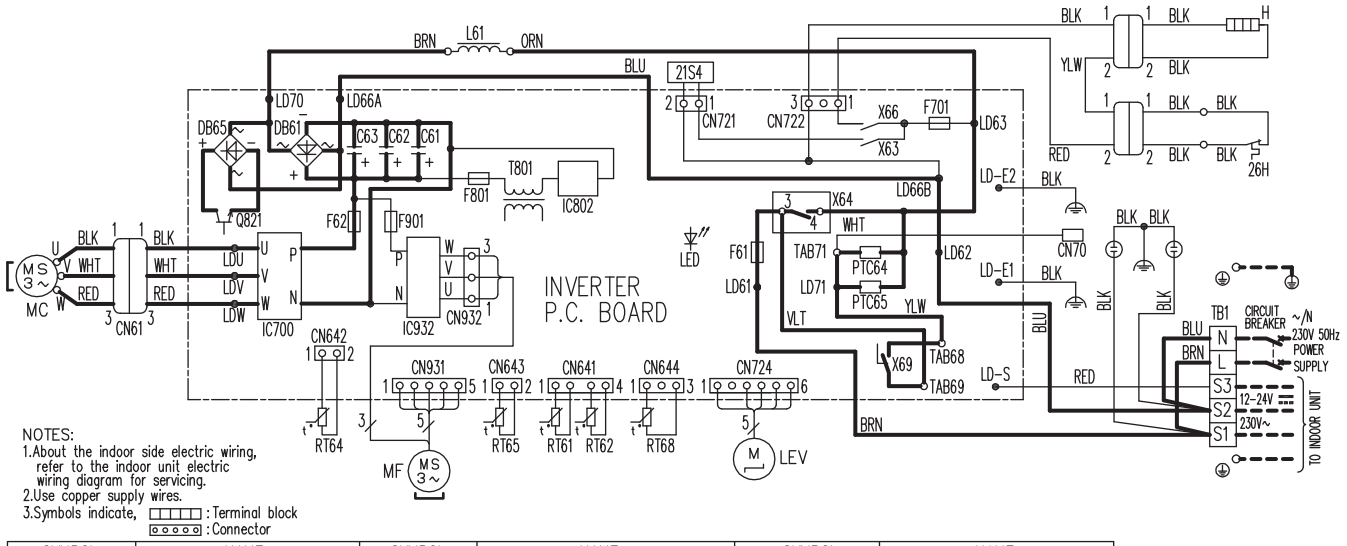

SYMBOL	NAME	SYMBOL	NAME	SYMBOL	NAME
CN61	CONNECTOR	LED	LED	RT64	FIN TEMP. THERMISTOR
C61, C62, C63	SMOOTHING CAPACITOR	LEV	EXPANSION VALVE COIL	RT65	AMBIENT TEMP. THERMISTOR
DB61, DB65	DIODE MODULE	L61	REACTOR	RT68	OUTDOOR HEAT EXCHANGER TEMP. THERMISTOR
F61	FUSE (25A 250V)	MC	COMPRESSOR		
F62	FUSE (15A 250V)	MF	FAN MOTOR	TB1	TERMINAL BLOCK
F701, F801, F901	FUSE (T3.15AL250V)	PTC64, PTC65	CIRCUIT PROTECTION	T801	TRANSFORMER
H	DEFROST HEATER	Q821	SWITCHING POWER TRANSISTOR	X63, X64, X66, X69	RELAY
IC700, IC932	POWER MODULE	RT61	DEFROST THERMISTOR	21S4	REVERSING VALVE COIL
IC802	POWER DEVICE	RT62	DISCHARGE TEMP. THERMISTOR	26H	HEATER PROTECTOR

MUZ-AP60VG -E1, ER1, E2

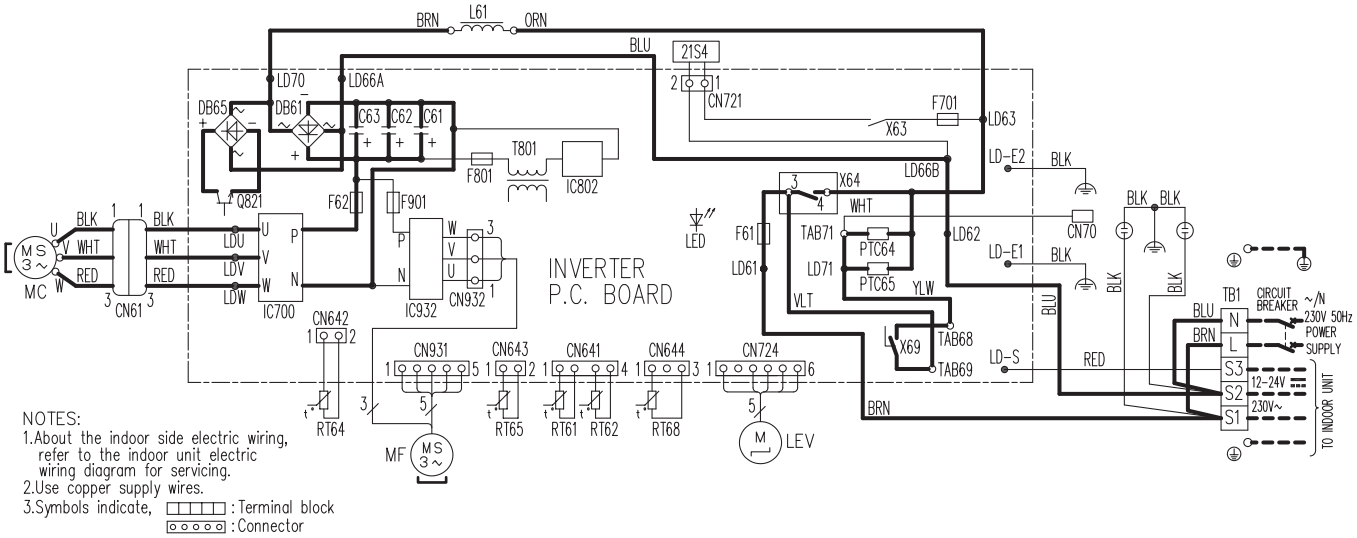

SYMBOL	NAME	SYMBOL	NAME	SYMBOL	NAME
CN61	CONNECTOR	LEV	EXPANSION VALVE COIL	RT65	AMBIENT TEMP. THERMISTOR
C61, C62, C63	SMOOTHING CAPACITOR	L61	REACTOR	RT68	OUTDOOR HEAT EXCHANGER TEMP. THERMISTOR
DB61, DB65	DIODE MODULE	MC	COMPRESSOR		
F61	FUSE (25A 250V)	MF	FAN MOTOR	TB1	TERMINAL BLOCK
F62	FUSE (15A 250V)	PTC64, PTC65	CIRCUIT PROTECTION	T801	TRANSFORMER
F701, F801, F901	FUSE (T3.15AL250V)	Q821	SWITCHING POWER TRANSISTOR	X63, X64, X69	RELAY
IC700, IC932	POWER MODULE	RT61	DEFROST THERMISTOR	21S4	REVERSING VALVE COIL
IC802	POWER DEVICE	RT62	DISCHARGE TEMP. THERMISTOR		
LED	LED	RT64	FIN TEMP. THERMISTOR		

MUZ-AP60VG - ET1

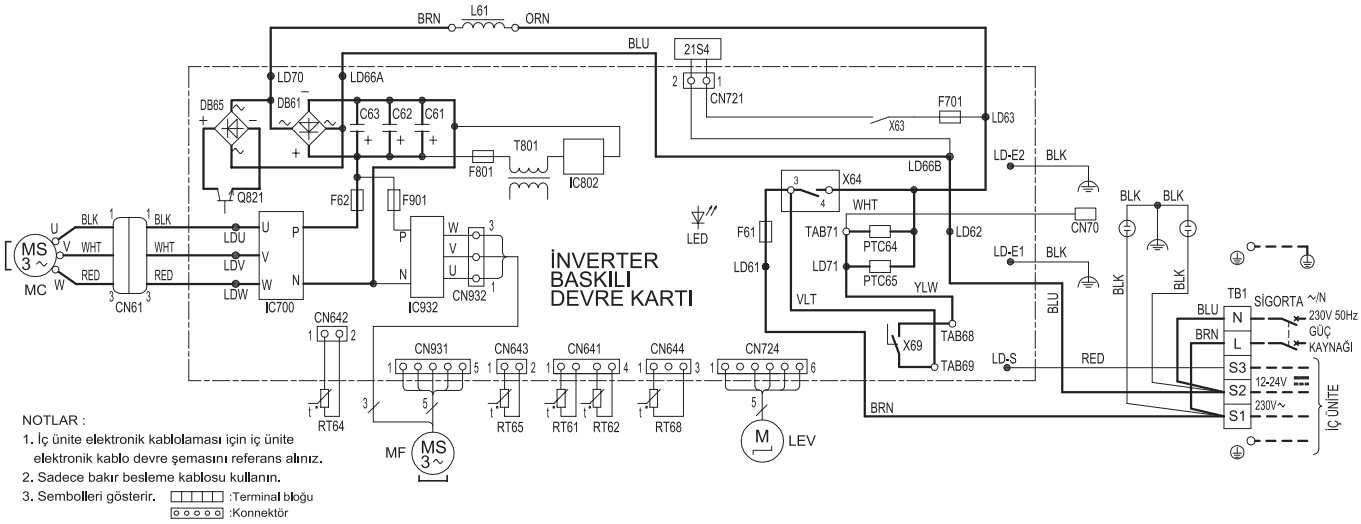

SEMBOL	PARÇA ADI	SEMBOL	PARÇA ADI	SEMBOL	PARÇA ADI
CN61	KONNEKTÖR	LEV	GENLEŞME VANASI SARGISI	RT65	ORTAM SICAKLIK TERMİSTÖRÜ
C61,C62,C63	KAPASİTÖR	L61	REAKTÖR	RT68	DIŞ ÜNİTE EŞANJÖR SICAKLIK TERMİSTÖRÜ
DB61,DB65	DİYOT MODÜLÜ	MC	KOMPRESÖR		
F61	SİGORTA (25A 250V)	MF	FAN MOTORU	TB1	TERMİNAL BLOĞU
F62	SİGORTA (15A 250V)	PTC64,PTC65	DEVRE KORUMASI	T801	TRANSFORMATÖR
F701,F801,F901	SİGORTA (T3. 15AL250V)	Q821	SİVİÇLİ GÜÇ TRANSİSTÖRÜ	X63,X64,X69	RÖLE
IC700,IC932	GÜÇ MODÜLÜ	RT61	DEFROST TERMİSTÖRÜ	21S4	4 YOLLU VANA SARGISI
IC802	GÜÇ CİHAZI	RT62	BASMA SICAKLIK TERMİSTÖRÜ		
LED	LED	RT64	FİN SICAKLIK TERMİSTÖRÜ		

MUZ-AP71VG - E1, ER1

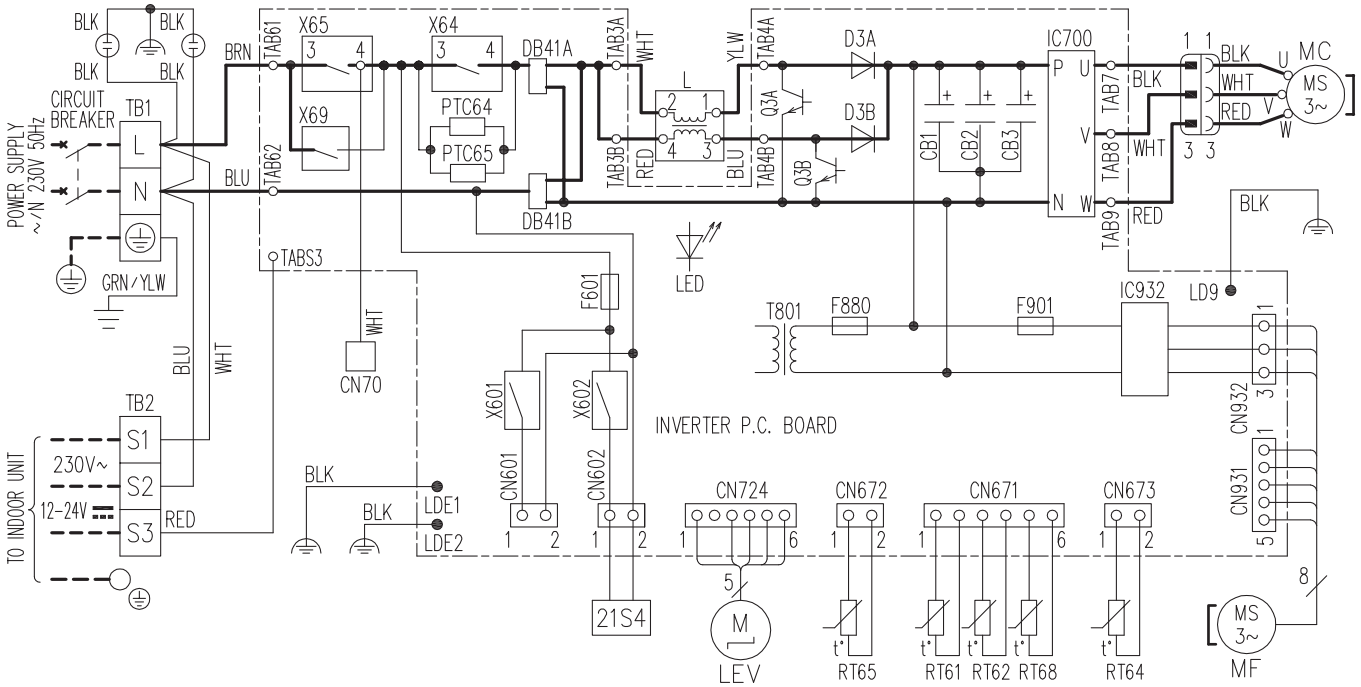

SYMBOL	NAME	SYMBOL	NAME	SYMBOL	NAME	SYMBOL	NAME
CB1, CB2, CB3	SMOOTHING CAPACITOR	L	REACTOR	RT61	DEFROST THERMISTOR	T801	TRANSFORMER
DB41A, DB41B	DIODE MODULE	LED	LED	RT62	DISCHARGE TEMP.THERMISTOR	X64, X65, X69	RELAY
D3A, D3B	DIODE	LEV	EXPANSION VALVE COIL	RT64	FIN TEMP.THERMISTOR	X601, X602	RELAY
F601	FUSE (T3.15AL250V)	MC	COMPRESSOR	RT65	AMBIENT TEMP.THERMISTOR	21S4	REVERSING VALVE COIL
F880	FUSE (T3.15AL250V)	MF	FAN MOTOR	RT68	OUTDOOR HEAT EXCHANGER TEMP.THERMISTOR		
F901	FUSE (T3.15AL250V)	PTC64, PTC65	CIRCUIT PROTECTION				
IC700, IC932	POWER MODULE	Q3A, Q3B	SWITCHING POWER TRANSISTOR	TB1, TB2	TERMINAL BLOCK		

NOTES 1.About the indoor side electric wiring, refer to the indoor unit electric wiring diagram for servicing.
2.Use copper supply wires. 3.Symbols indicate, : Terminal block : Connector

MUZ-AP71VG - E2

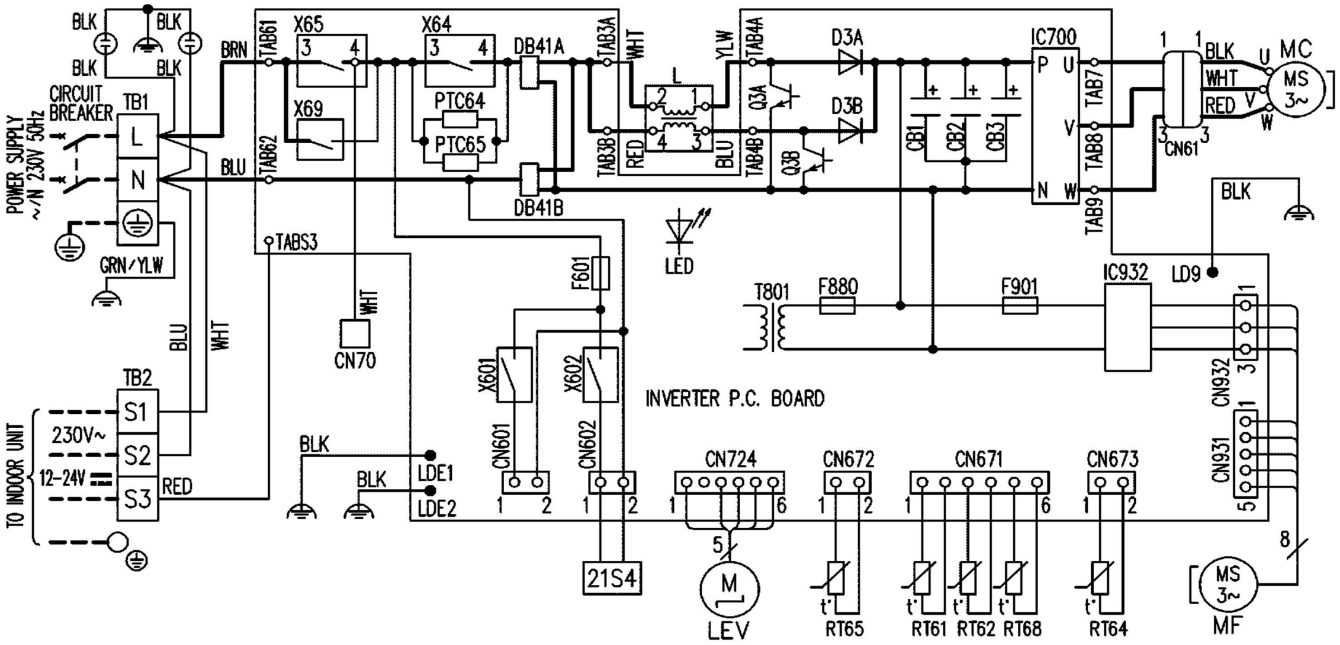

SYMBOL	NAME	SYMBOL	NAME	SYMBOL	NAME	SYMBOL	NAME
CN61	CONNECTOR	L	REACTOR	RT61	DEFROST THERMISTOR	T801	TRANSFORMER
CB1, CB2, CB3	SMOOTHING CAPACITOR	LED	LED	RT62	DISCHARGE TEMP.THERMISTOR	X64, X65, X69	RELAY
DB41A, DB41B	DIODE MODULE	LEV	EXPANSION VALVE COIL	RT64	FIN TEMP.THERMISTOR	X601, X602	RELAY
D3A, D3B	DIODE	MC	COMPRESSOR	RT65	AMBIENT TEMP.THERMISTOR	21S4	REVERSING VALVE COIL
F601	FUSE (T3.15AL250V)	MF	FAN MOTOR	RT68	OUTDOOR HEAT EXCHANGER TEMP.THERMISTOR	TB1, TB2	TERMINAL BLOCK
F880	FUSE (T3.15AL250V)	PTC64, PTC65	CIRCUIT PROTECTION				
F901	FUSE (T3.15AL250V)	IC700, IC932	POWER MODULE	Q3A,Q3B	SWITCHING POWER TRANSISTOR		

NOTES 1.About the indoor side electric wiring, refer to the indoor unit electric wiring diagram for servicing.
2.Use copper supply wires. 3.Symbols indicate, ☐☐☐ : Terminal block ○○○ : Connector

MUZ-AP71VG - ET1

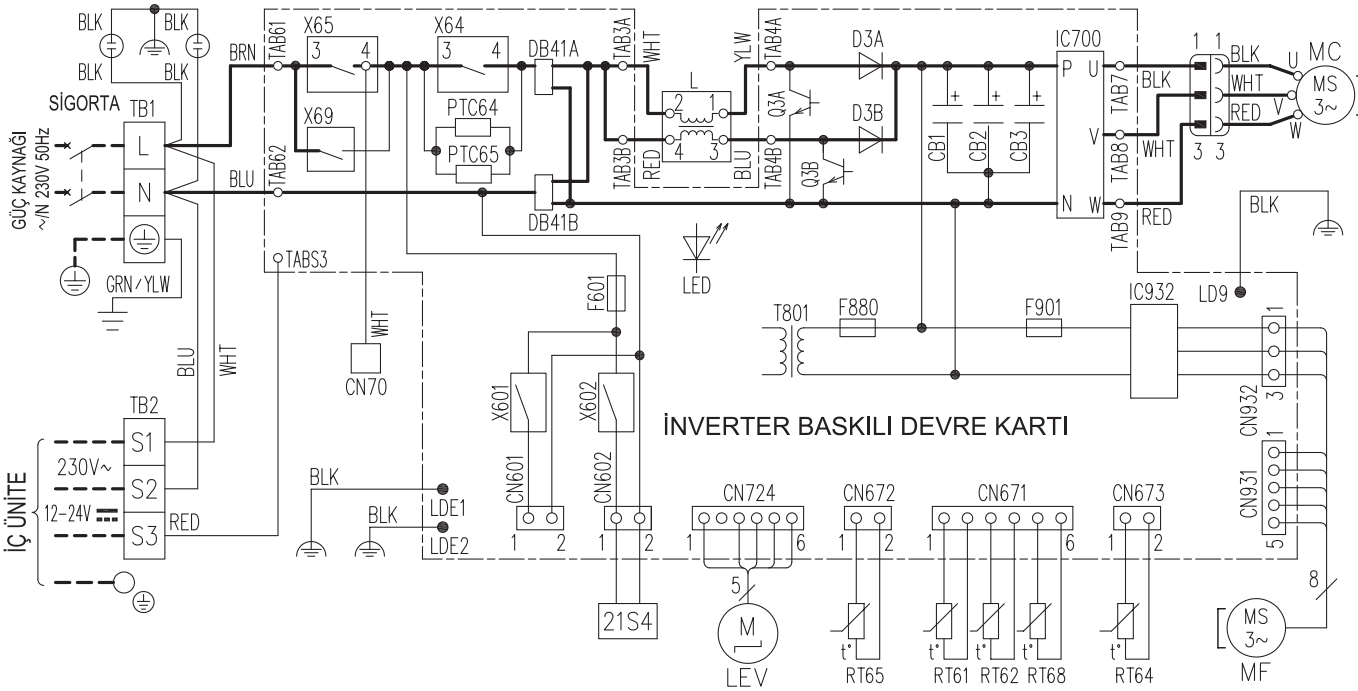

SEMBOL	PARÇA ADI	SEMBOL	PARÇA ADI	SEMBOL	PARÇA ADI	SEMBOL	PARÇA ADI
CB1,CB2,CB3	KAPASİTÖR	L	REAKTÖR	RT61	DEFROST TERMİSTÖRÜ	T801	TRANSFORMATÖR
DB41A,DB41B	DİYOT MODÜLÜ	LED	LED	RT62	BASMA SICAKLIK TERMİSTÖRÜ	X64,X65,X69	RÖLE
D3A,D3B	DİYOT	LEV	GENLEŞME VANASI SARGISI	RT64	FİN SICAKLIK TERMİSTÖRÜ	X601,X602	RÖLE
F601	SİGORTA (T3. 15AL250V)	MC	KOMPRESÖR	RT65	ORTAM SICAKLIK TERMİSTÖRÜ	21S4	4 YOLLU VANA SARGISI
F880	SİGORTA (T3. 15AL250V)	MF	FAN MOTORU	RT68	DIŞ ÜNİTE EŞANJÖR SICAKLIK TERMİSTÖRÜ		
F901	SİGORTA (T3. 15AL250V)	PTC64,PTC65	DEVRE KORUMASI				
IC700,IC932	GÜÇ MODÜLÜ	Q3A,Q3B	SİVİÇLİ GÜÇ TRANSİSTÖRÜ	TB1,TB2	TERMİNAL BLOĞU		

NOTLAR : 1. İç ünite elektronik kablolaması için iç ünite elektronik kablo devre şemasını referans alınız.
2. Sadece bakır besleme kablosu kullanın. 3. Sembolleri gösterir. ☐☐☐ :Terminal bloğu ○○○ :Konnektör

8 REFRIGERANT SYSTEM DIAGRAM

MUZ-AP25VG **MUZ-AP35VG**
MUZ-AP25VGH **MUZ-AP35VGH**

Unit: mm

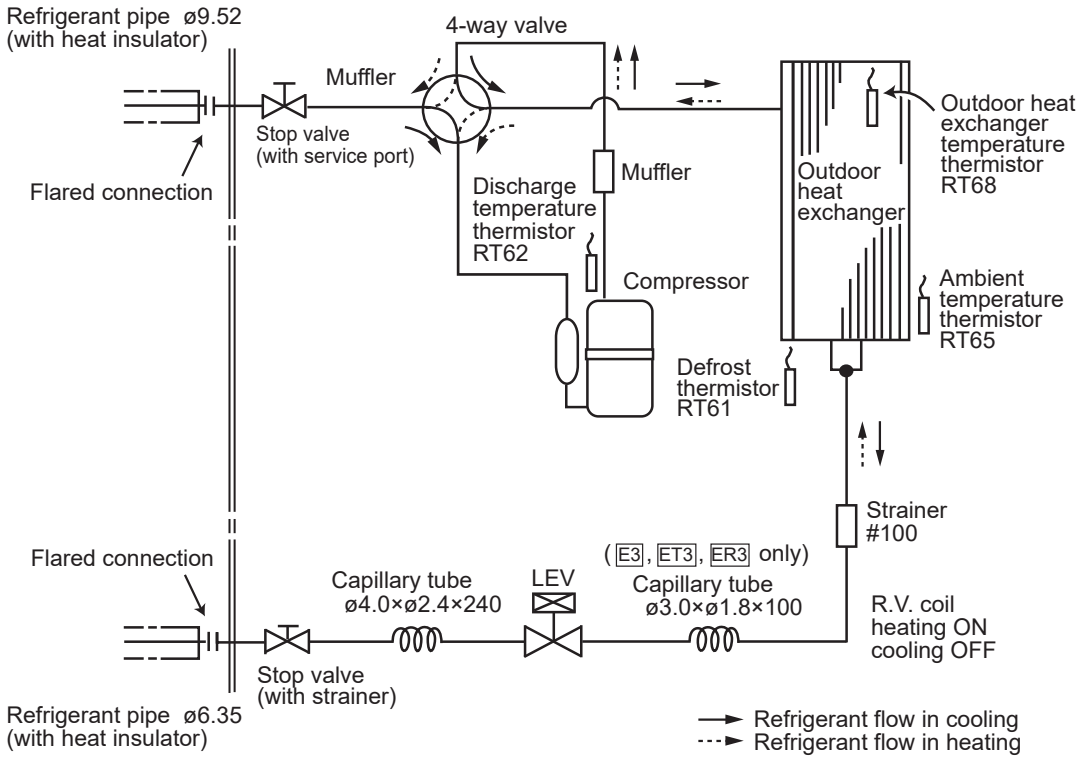

MUZ-AP42VG
MUZ-AP42VGH

Unit: mm

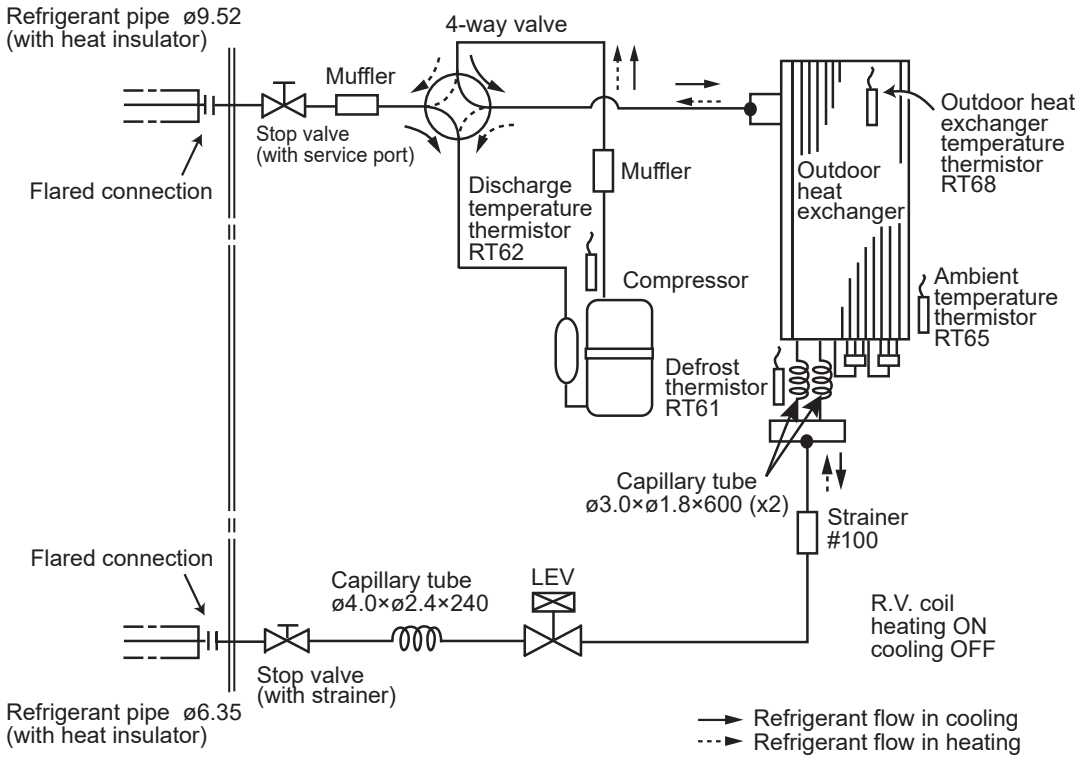

MUZ-AP50VG MUZ-AP60VG
MUZ-AP50VGH

Unit: mm

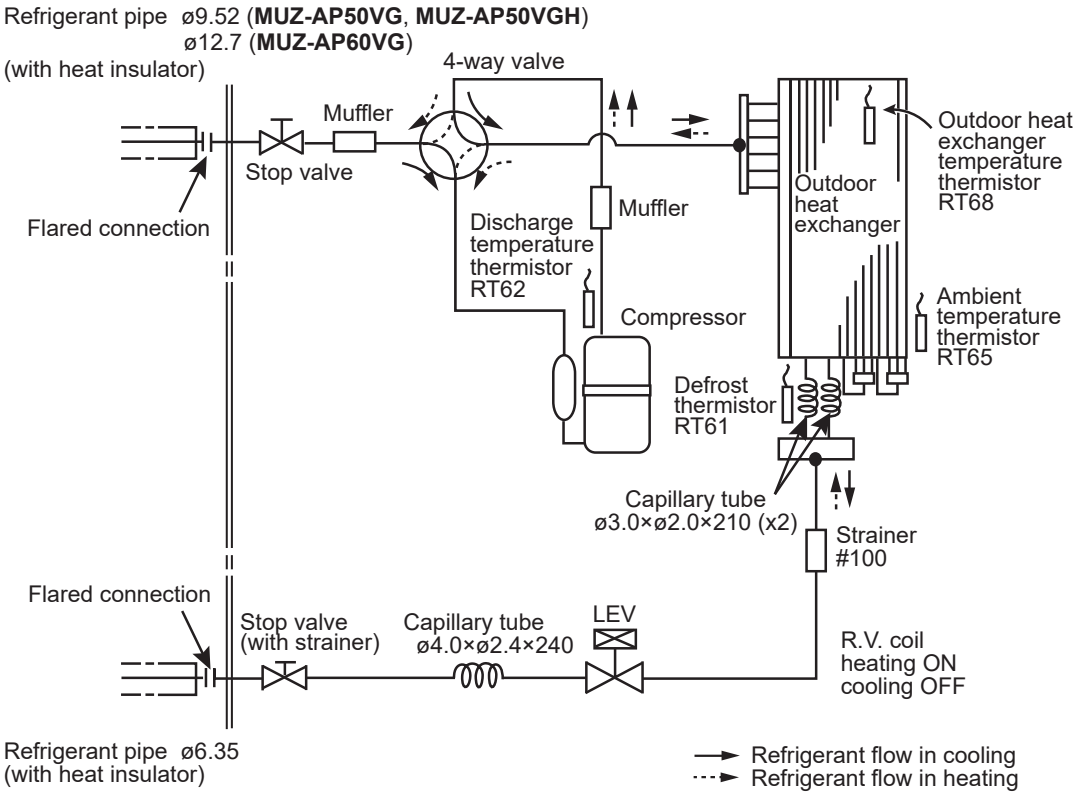

MUZ-AP71VG

Unit: mm

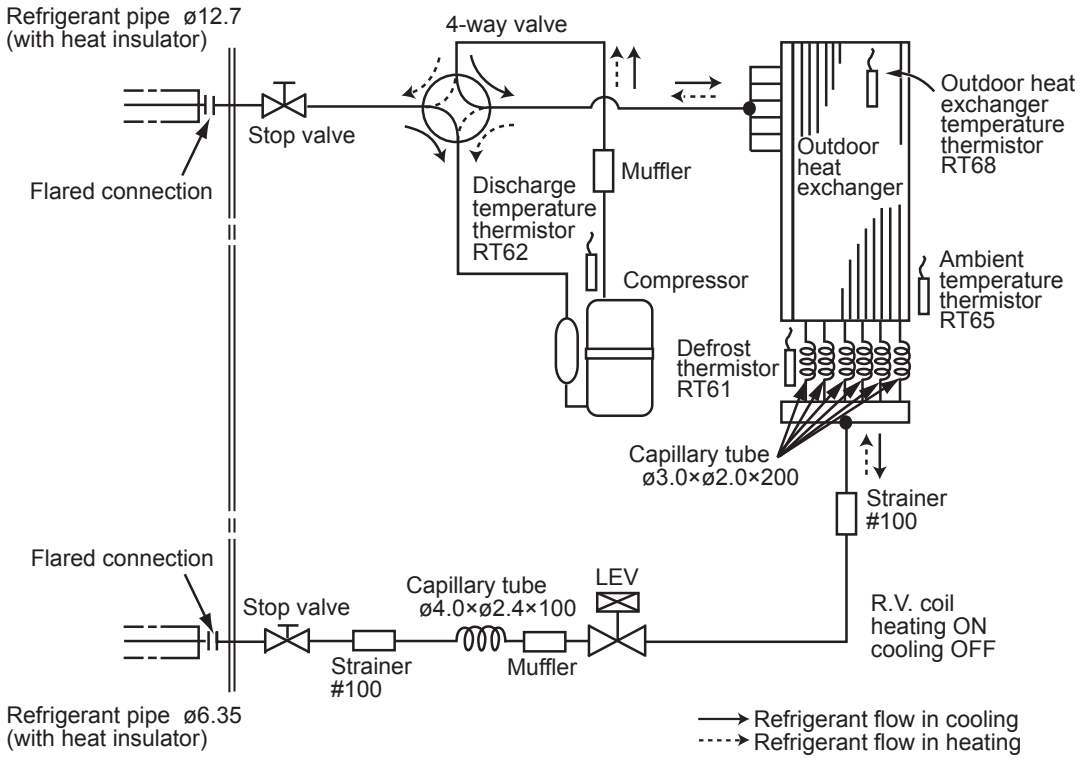

MAX. REFRIGERANT PIPING LENGTH and MAX. HEIGHT DIFFERENCE

Model	Refrigerant piping: m		Piping size O.D: mm	
	Max. Length A	Max. Height difference B	Gas	Liquid
MUZ-AP25/35/42/50VG **MUZ-AP25/35/42/50VGH**	20	12	9.52	6.35
MUZ-AP60VG	30	15	12.7	6.35
MUZ-AP71VG	30	15	12.7	6.35

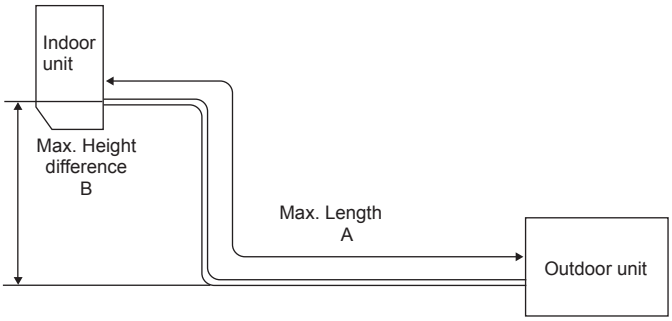

ADDITIONAL REFRIGERANT CHARGE (R32: g)

Model	Outdoor unit precharged	Refrigerant piping length (one way)									
		7 m	8 m	9 m	10 m	11 m	12 m	13 m	14 m	15 m	20 m
MUZ-AP25/35VG **MUZ-AP25/35VGH**	550	0	20	40	60	80	100	120	140	160	260
MUZ-AP42VG **MUZ-AP42VGH**	700										
MUZ-AP50VG **MUZ-AP50VGH**	1,000										

Calculation: X g = 20 g/m × (Refrigerant piping length (m) – 7)

Model	Outdoor unit precharged	Refrigerant piping length (one way)					
		15 m	16 m	17 m	20 m	25 m	30 m
MUZ-AP60VG	1,050	0	20	40	100	200	300
MUZ-AP71VG	1,500						

Calculation: X g = 20 g/m × (Refrigerant piping length (m) – 15)

NOTE: Refrigerant piping exceeding 7 m requires additional refrigerant charge according to the calculation.

9 PERFORMANCE CURVES

MUZ-AP25VG MUZ-AP35VG MUZ-AP42VG MUZ-AP50VG MUZ-AP60VG MUZ-AP71VG
MUZ-AP25VGH MUZ-AP35VGH MUZ-AP42VGH MUZ-AP50VGH

The standard specifications apply only to the operation of the air conditioner under normal conditions. Since operating conditions vary according to the areas where these units are installed, the following information has been provided to clarify the operating characteristics of the air conditioner under the conditions indicated by the performance curve.

(1) GUARANTEED VOLTAGE

198 ~ 264 V, 50 Hz

(2) AIRFLOW

Airflow should be set at MAX.

(3) MAIN READINGS

(1) Indoor intake air wet-bulb temperature:	°C [WB]	Cooling
(2) Indoor outlet air wet-bulb temperature:	°C [WB]	Cooling
(3) Outdoor intake air dry-bulb temperature:	°C [DB]	Cooling
(4) Total input:	W	Cooling
(5) Indoor intake air dry-bulb temperature:	°C [DB]	Heating
(6) Outdoor intake air wet-bulb temperature:	°C [WB]	Heating
(7) Total input:	W	Heating

Indoor air wet and dry bulb temperature difference on the left side of the following chart shows the difference between the indoor intake air wet and dry bulb temperature and the indoor outlet air wet and dry bulb temperature for your reference at service.

(4) GUARANTEED OUTDOOR TEMPERATURE

1. MUZ-AP25/35/42/50/60/71VG
   COOLING (DB/WB): -10/- ~ 46/-
   HEATING (DB/WB): -15/-16 ~ 24/18
2. MUZ-AP25/35/42/50VGH
   COOLING (DB/WB): -10/- ~ 46/-
   HEATING (DB/WB): -20/-21 ~ 24/18

How to measure the indoor air wet and dry bulb temperature difference

1. Attach at least 2 sets of wet and dry bulb thermometers to the indoor air intake as shown in the figure, and at least 2 sets of wet and dry bulb thermometers to the indoor air outlet. The thermometers must be attached to the position where air speed is high.
2. Attach at least 2 sets of wet and dry bulb thermometers to the outdoor air intake.
   Cover the thermometers to prevent direct rays of the sun.
3. Check that the air filter is cleaned.
4. Open windows and doors of room.
5. Press the emergency operation switch once (twice) to start the EMERGENCY COOL (HEAT) MODE.
6. When system stabilizes after more than 15 minutes, measure temperature and take an average temperature.
7. 10 minutes later, measure temperature again and check that the temperature does not change.

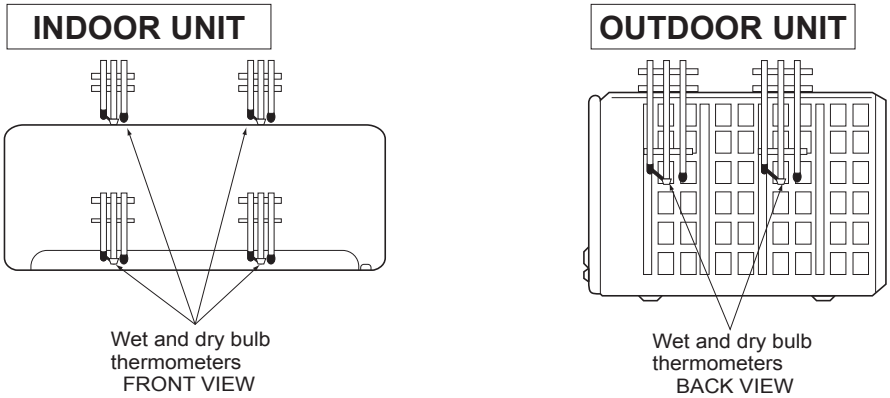

9-1. CAPACITY AND INPUT CURVES

Indoor air Wet-bulb temperature difference (°C)	MUZ-AP25VG MUZ-AP25VGH	MUZ-AP35VG MUZ-AP35VGH	MUZ-AP42VG MUZ-AP42VGH	MUZ-AP50VG MUZ-AP50VGH	MUZ-AP60VG	MUZ-AP71VG
5.9	8.6	10.7	11.7	9.1	11.2
5.4	7.9	9.9	10.8	8.4	10.3
5.0	7.3	9.0	9.9	7.7	9.4
4.6	6.7	8.2	9.0	7.0	8.6
4.2	6.0	7.4	8.1	6.4	7.7
3.8	5.4	6.7	7.2	5.7	6.9
3.4	4.8	5.9	6.4	5.1	6.1

Cooling capacity (at Rated frequency)

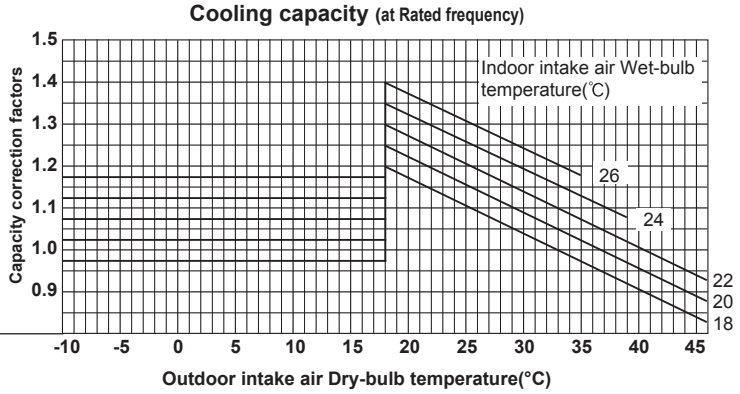

Total input (Cooling : at Rated frequency)

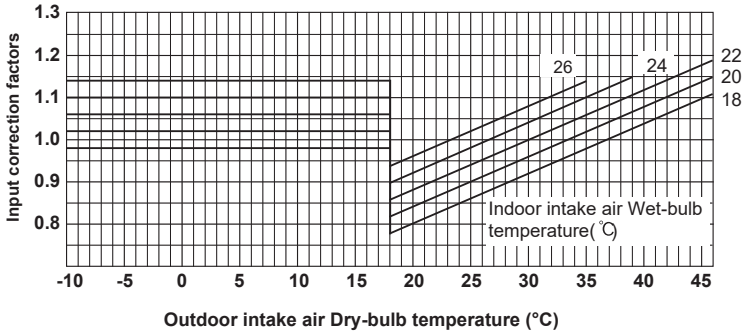

Indoor air Dry-bulb temperature difference (°C)	MUZ-AP25VG MUZ-AP25VGH	MUZ-AP35VG MUZ-AP35VGH	MUZ-AP42VG MUZ-AP42VGH	MUZ-AP50VG MUZ-AP50VGH	MUZ-AP60VG	MUZ-AP71VG
16.2	20.3	25.2	27.1	21.9	27.6
15.0	18.7	23.3	25.0	20.2	25.5
13.7	17.2	21.3	22.9	18.5	23.3
12.5	15.6	19.4	20.8	16.8	21.2
11.2	14.0	17.5	18.8	15.2	19.1
10.0	12.5	15.5	16.7	13.5	17.0
8.7	10.9	13.6	14.6	11.8	14.9
7.5	9.4	11.6	12.5	10.1	12.7
6.2	7.8	9.7	10.4	8.4	10.6
5.0	6.2	7.8	8.3	6.7	8.5

Heating capacity (at Rated frequency)

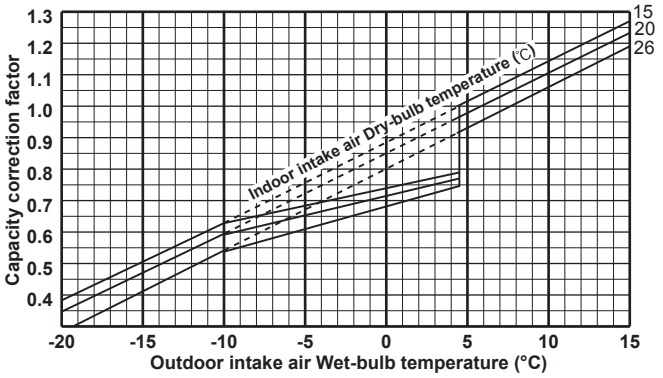

Total input (Heating : at Rated frequency)

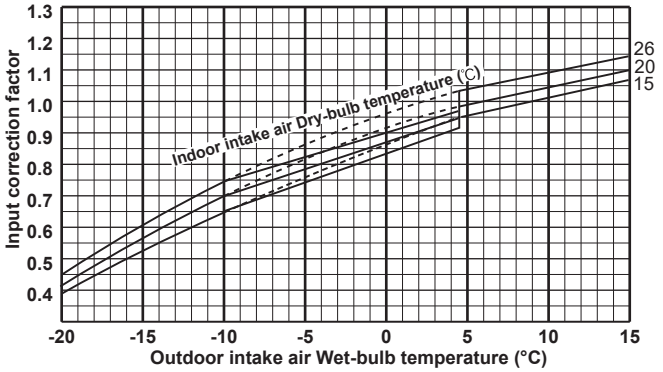

Lower limit of guaranteed operating range in heating
MUZ-AP25/35/42/50/60/71VG: -15°C
MUZ-AP25/35/42/50VGH: -20°C

NOTE: The above broken lines are for the heating operation without any frost and defrost operation.

9-2. CAPACITY AND INPUT CORRECTION BY OPERATIONAL FREQUENCY OF COMPRESSOR

MUZ-AP25VG
MUZ-AP25VGH

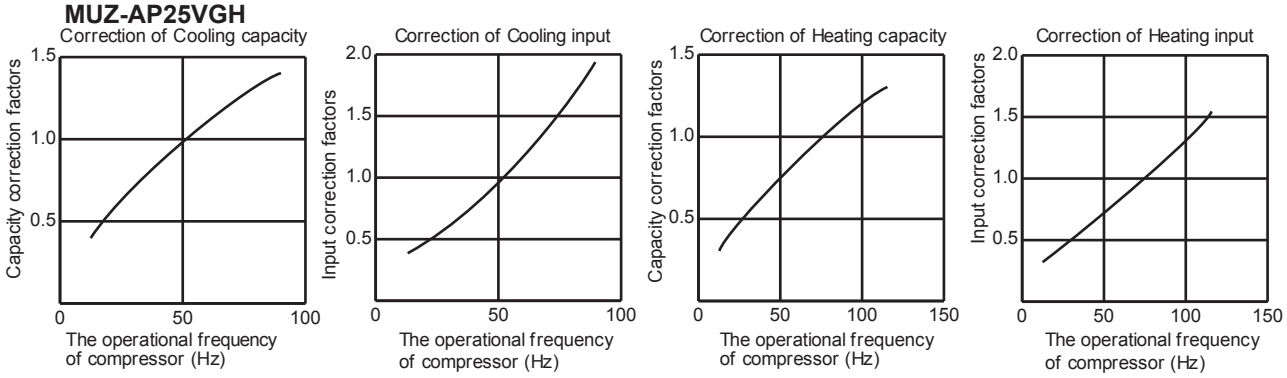

MUZ-AP35VG
MUZ-AP35VGH

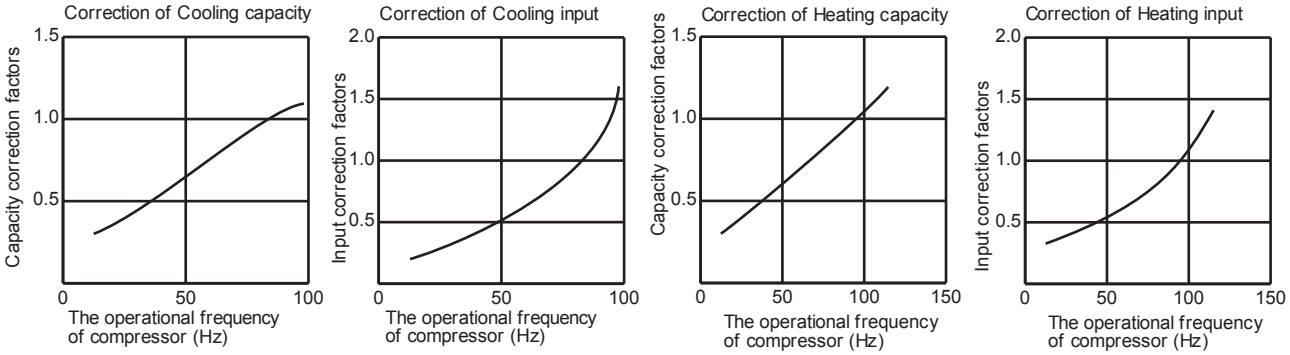

MUZ-AP42VG
MUZ-AP42VGH

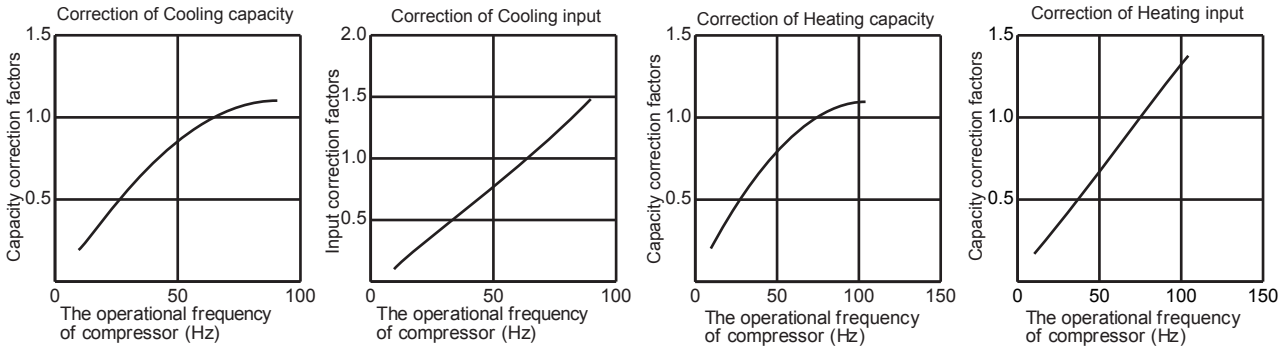

MUZ-AP50VG
MUZ-AP50VGH

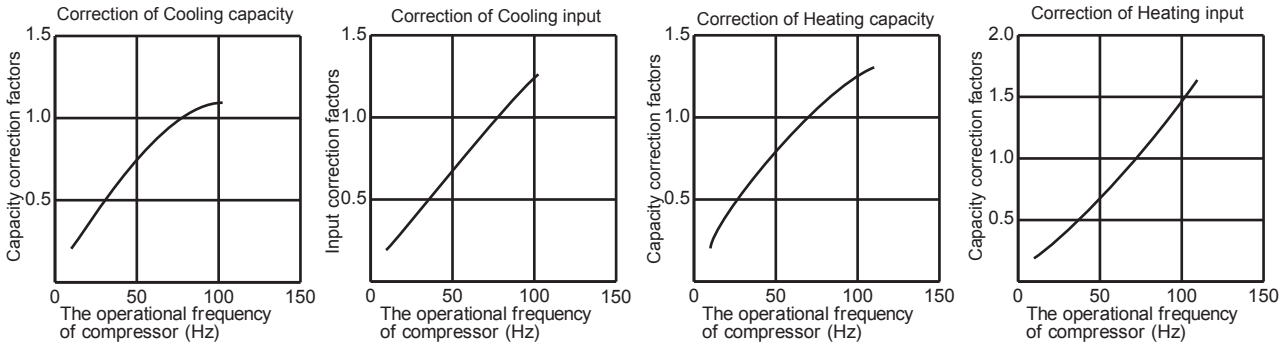

MUZ-AP60VG

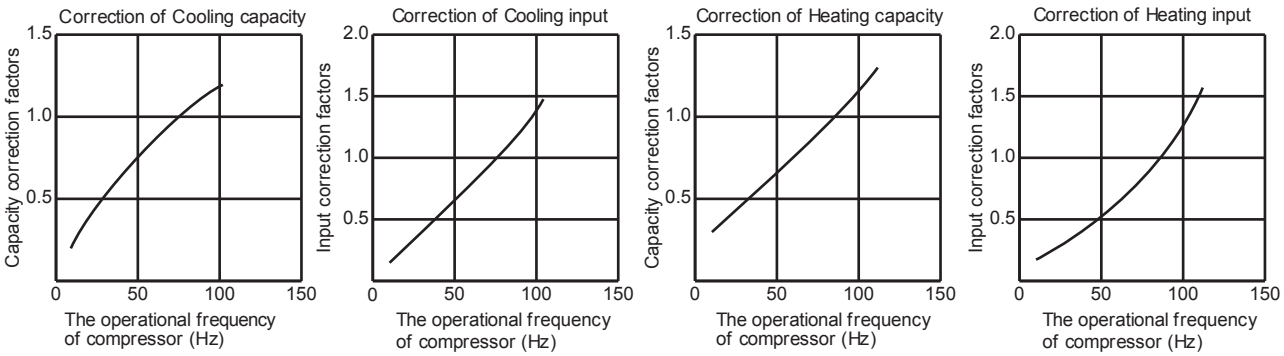

MUZ-AP71VG

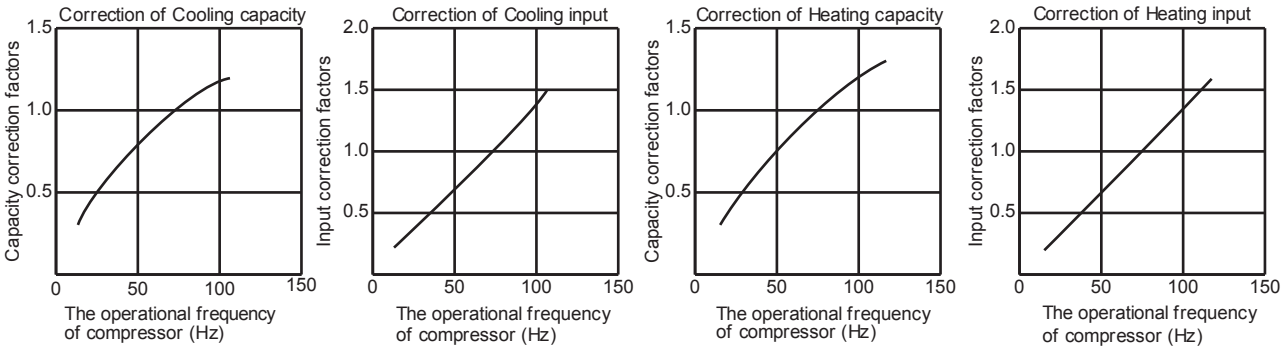

9-3. HOW TO OPERATE FIXED-FREQUENCY OPERATION

<Test run operation>

1. Press the emergency operation switch to start COOL or HEAT mode (COOL: Press once, HEAT: Press twice).
2. Test run operation starts and continues to operate for 30 minutes.
3. Compressor operates at rated frequency in COOL mode or 58 Hz in HEAT mode.
4. Indoor fan operates at High speed.
5. After 30 minutes, test run operation finishes and EMERGENCY OPERATION starts (operational frequency of compressor varies).
6. To cancel test run operation (EMERGENCY OPERATION), press the emergency operation switch or any button on remote controller.

9-4. OUTDOOR LOW PRESSURE AND OUTDOOR UNIT CURRENT

COOL operation

① Both indoor and outdoor unit are under the same temperature/ humidity condition.
② Operation: TEST RUN OPERATION (Refer to 9-3.)

Dry-bulb temperature (°C)	Relative humidity (%)
20	50
25	60
30	70

Outdoor low pressure

MUZ-AP25VG
MUZ-AP25VGH

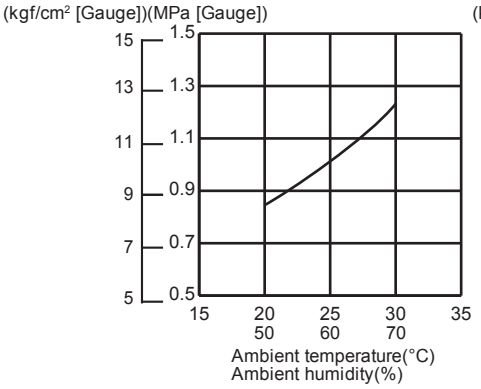

MUZ-AP35VG
MUZ-AP35VGH

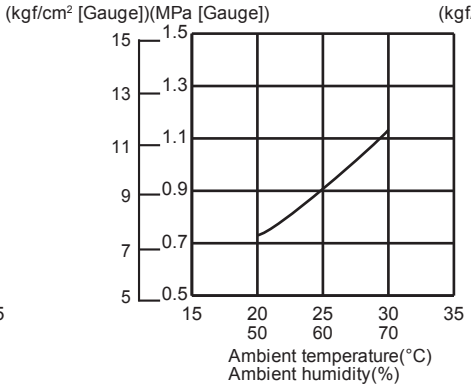

MUZ-AP42VG
MUZ-AP42VGH

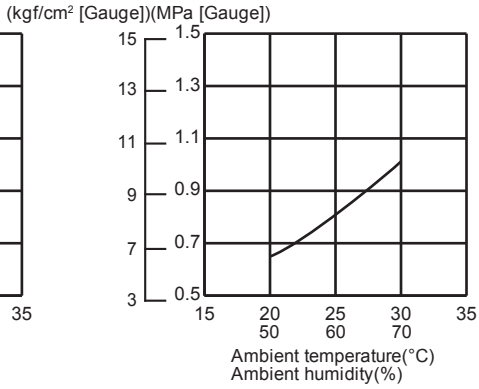

MUZ-AP50VG
MUZ-AP50VGH

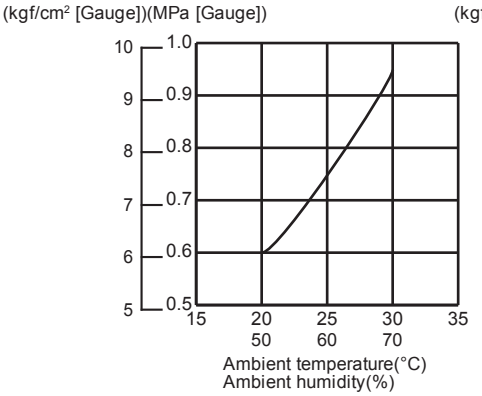

MUZ-AP60VG

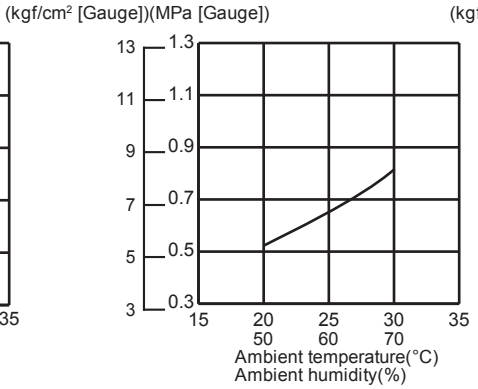

MUZ-AP71VG

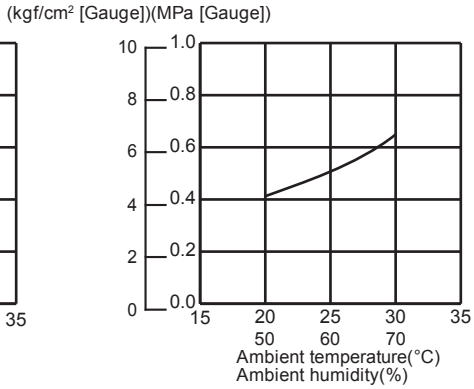

NOTE:
The unit of pressure has been changed to MPa on the international system of units (SI unit system)
The conversion factor is: **1 (MPa [Gauge]) = 10.2 (kgf/cm^2 [Gauge])**

Outdoor unit current

MUZ-AP25VG
MUZ-AP25VGH

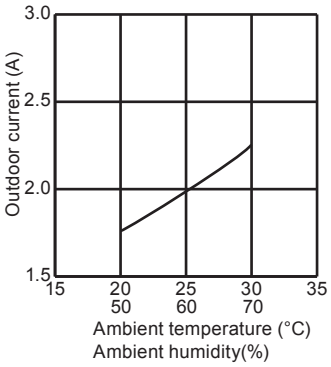

MUZ-AP35VG
MUZ-AP35VGH

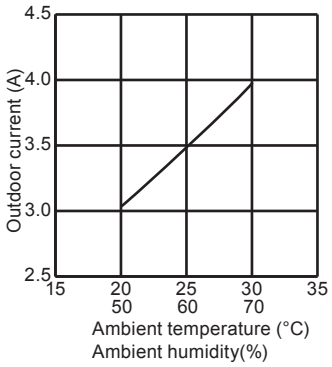

MUZ-AP42VG
MUZ-AP42VGH

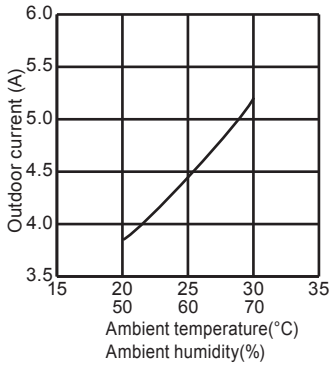

MUZ-AP50VG
MUZ-AP50VGH

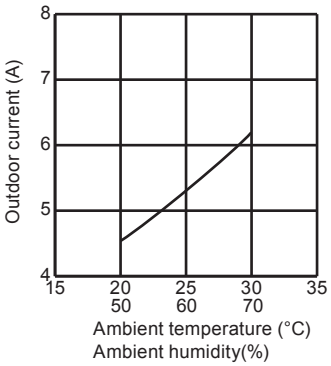

MUZ-AP60VG

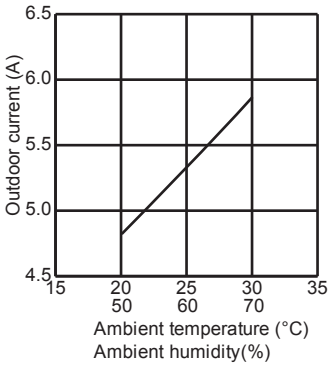

MUZ-AP71VG

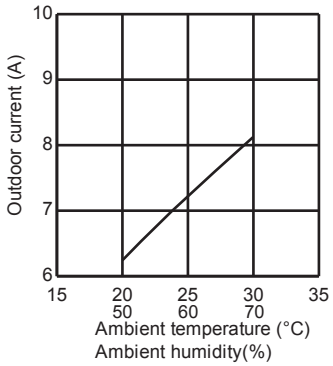

HEAT operation

① Condition:

	Indoor	Outdoor			
Dry bulb temperature (°C)	20.0	2	7	15	20.0
Wet bulb temperature (°C)	14.5	1	6	12	14.5

② Operation: Test run operation (Refer to 9-3.)

Outdoor unit current

MUZ-AP25VG
MUZ-AP25VGH

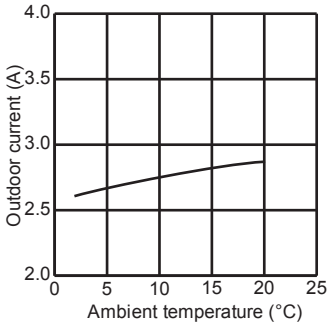

MUZ-AP35VG
MUZ-AP35VGH

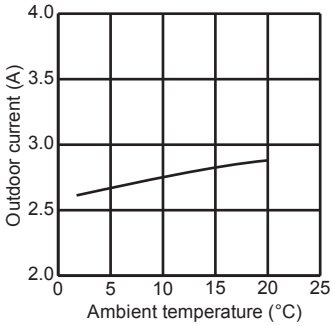

MUZ-AP42VG
MUZ-AP42VGH

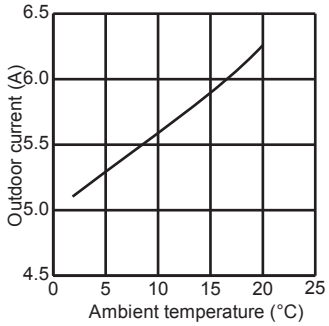

MUZ-AP50VG
MUZ-AP50VGH

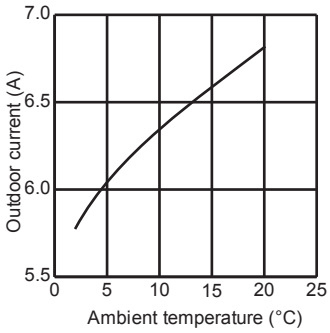

MUZ-AP60VG

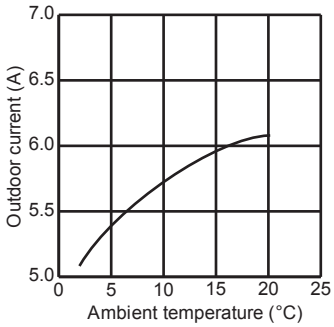

MUZ-AP71VG

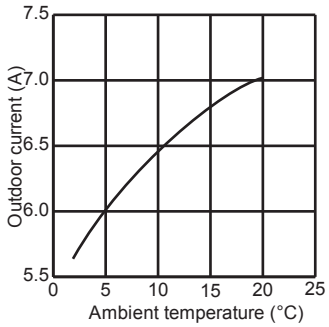

PERFORMANCE DATA COOL operation at Rated frequency

MUZ-AP25VG MUZ-AP25VGH

CAPACITY: 2.5 kW SHF: 0.92 INPUT: 600 W

INDOOR DB (°C)	INDOOR WB (°C)	OUTDOOR DB (°C)															
		21				25				27				30			
		Q	SHC	SHF	INPUT	Q	SHC	SHF	INPUT	Q	SHC	SHF	INPUT	Q	SHC	SHF	INPUT
21	18	2.94	2.17	0.74	480	2.81	2.08	0.74	504	2.70	2.00	0.74	528	2.60	1.92	0.74	552
21	20	3.06	1.90	0.62	504	2.94	1.82	0.62	534	2.85	1.77	0.62	546	2.75	1.71	0.62	570
22	18	2.94	2.29	0.78	480	2.81	2.19	0.78	504	2.70	2.11	0.78	528	2.60	2.03	0.78	552
22	20	3.06	2.02	0.66	504	2.94	1.94	0.66	534	2.85	1.88	0.66	546	2.75	1.82	0.66	570
22	22	3.19	1.72	0.54	522	3.08	1.66	0.54	555	3.00	1.62	0.54	570	2.88	1.55	0.54	594
23	18	2.94	2.41	0.82	480	2.81	2.31	0.82	504	2.70	2.21	0.82	528	2.60	2.13	0.82	552
23	20	3.06	2.14	0.70	504	2.94	2.06	0.70	534	2.85	2.00	0.70	546	2.75	1.93	0.70	570
23	22	3.19	1.85	0.58	522	3.08	1.78	0.58	555	3.00	1.74	0.58	570	2.88	1.67	0.58	594
24	18	2.94	2.53	0.86	480	2.81	2.42	0.86	504	2.70	2.32	0.86	528	2.60	2.24	0.86	552
24	20	3.06	2.27	0.74	504	2.94	2.17	0.74	534	2.85	2.11	0.74	546	2.75	2.04	0.74	570
24	22	3.19	1.98	0.62	522	3.08	1.91	0.62	555	3.00	1.86	0.62	570	2.88	1.78	0.62	594
24	24	3.35	1.68	0.50	546	3.23	1.61	0.50	576	3.15	1.58	0.50	594	3.05	1.53	0.50	624
25	18	2.94	2.64	0.90	480	2.81	2.53	0.90	504	2.70	2.43	0.90	528	2.60	2.34	0.90	552
25	20	3.06	2.39	0.78	504	2.94	2.29	0.78	534	2.85	2.22	0.78	546	2.75	2.15	0.78	570
25	22	3.19	2.10	0.66	522	3.08	2.03	0.66	555	3.00	1.98	0.66	570	2.88	1.90	0.66	594
25	24	3.35	1.81	0.54	546	3.23	1.74	0.54	576	3.15	1.70	0.54	594	3.05	1.65	0.54	624
26	18	2.94	2.76	0.94	480	2.81	2.64	0.94	504	2.70	2.54	0.94	528	2.60	2.44	0.94	552
26	20	3.06	2.51	0.82	504	2.94	2.41	0.82	534	2.85	2.34	0.82	546	2.75	2.26	0.82	570
26	22	3.19	2.23	0.70	522	3.08	2.15	0.70	555	3.00	2.10	0.70	570	2.88	2.01	0.70	594
26	24	3.35	1.94	0.58	546	3.23	1.87	0.58	576	3.15	1.83	0.58	594	3.05	1.77	0.58	624
26	26	3.45	1.59	0.46	576	3.35	1.54	0.46	606	3.30	1.52	0.46	624	3.20	1.47	0.46	642
27	18	2.94	2.88	0.98	480	2.81	2.76	0.98	504	2.70	2.65	0.98	528	2.60	2.55	0.98	552
27	20	3.06	2.63	0.86	504	2.94	2.53	0.86	534	2.85	2.45	0.86	546	2.75	2.37	0.86	570
27	22	3.19	2.36	0.74	522	3.08	2.28	0.74	555	3.00	2.22	0.74	570	2.88	2.13	0.74	594
27	24	3.35	2.08	0.62	546	3.23	2.00	0.62	576	3.15	1.95	0.62	594	3.05	1.89	0.62	624
27	26	3.45	1.73	0.50	576	3.35	1.68	0.50	606	3.30	1.65	0.50	624	3.20	1.60	0.50	642
28	18	2.94	2.94	1.00	480	2.81	2.81	1.00	504	2.70	2.70	1.00	528	2.60	2.60	1.00	552
28	20	3.06	2.76	0.90	504	2.94	2.64	0.90	534	2.85	2.57	0.90	546	2.75	2.48	0.90	570
28	22	3.19	2.49	0.78	522	3.08	2.40	0.78	555	3.00	2.34	0.78	570	2.88	2.24	0.78	594
28	24	3.35	2.21	0.66	546	3.23	2.13	0.66	576	3.15	2.08	0.66	594	3.05	2.01	0.66	624
28	26	3.45	1.86	0.54	576	3.35	1.81	0.54	606	3.30	1.78	0.54	624	3.20	1.73	0.54	642
29	18	2.94	2.94	1.00	480	2.81	2.81	1.00	504	2.70	2.70	1.00	528	2.60	2.60	1.00	552
29	20	3.06	2.88	0.94	504	2.94	2.76	0.94	534	2.85	2.68	0.94	546	2.75	2.59	0.94	570
29	22	3.19	2.61	0.82	522	3.08	2.52	0.82	555	3.00	2.46	0.82	570	2.88	2.36	0.82	594
29	24	3.35	2.35	0.70	546	3.23	2.26	0.70	576	3.15	2.21	0.70	594	3.05	2.14	0.70	624
29	26	3.45	2.00	0.58	576	3.35	1.94	0.58	606	3.30	1.91	0.58	624	3.20	1.86	0.58	642
30	18	2.94	2.94	1.00	480	2.81	2.81	1.00	504	2.70	2.70	1.00	528	2.60	2.60	1.00	552
30	20	3.06	3.00	0.98	504	2.94	2.88	0.98	534	2.85	2.79	0.98	546	2.75	2.70	0.98	570
30	22	3.19	2.74	0.86	522	3.08	2.64	0.86	555	3.00	2.58	0.86	570	2.88	2.47	0.86	594
30	24	3.35	2.48	0.74	546	3.23	2.39	0.74	576	3.15	2.33	0.74	594	3.05	2.26	0.74	624
30	26	3.45	2.14	0.62	576	3.35	2.08	0.62	606	3.30	2.05	0.62	624	3.20	1.98	0.62	642
31	18	2.94	2.94	1.00	480	2.81	2.81	1.00	504	2.70	2.70	1.00	528	2.60	2.60	1.00	552
31	20	3.06	3.06	1.00	504	2.94	2.94	1.00	534	2.85	2.85	1.00	546	2.75	2.75	1.00	570
31	22	3.19	2.87	0.90	522	3.08	2.77	0.90	555	3.00	2.70	0.90	570	2.88	2.59	0.90	594
31	24	3.35	2.61	0.78	546	3.23	2.52	0.78	576	3.15	2.46	0.78	594	3.05	2.38	0.78	624
31	26	3.45	2.28	0.66	576	3.35	2.21	0.66	606	3.30	2.18	0.66	624	3.20	2.11	0.66	642
32	18	2.94	2.94	1.00	480	2.81	2.81	1.00	504	2.70	2.70	1.00	528	2.60	2.60	1.00	552
32	20	3.06	3.06	1.00	504	2.94	2.94	1.00	534	2.85	2.85	1.00	546	2.75	2.75	1.00	570
32	22	3.19	3.00	0.94	522	3.08	2.89	0.94	555	3.00	2.82	0.94	570	2.88	2.70	0.94	594
32	24	3.35	2.75	0.82	546	3.23	2.64	0.82	576	3.15	2.58	0.82	594	3.05	2.50	0.82	624
32	26	3.45	2.42	0.70	576	3.35	2.35	0.70	606	3.30	2.31	0.70	624	3.20	2.24	0.70	642

NOTE Q : Total capacity (kW) SHF : Sensible heat factor DB : Dry-bulb temperature
SHC : Sensible heat capacity (kW) INPUT : Total power input (W) WB : Wet-bulb temperature

PERFORMANCE DATA COOL operation at Rated frequency

MUZ-AP25VG MUZ-AP25VGH

CAPACITY: 2.5 kW SHF: 0.92 INPUT: 600 W

INDOOR DB (°C)	INDOOR WB (°C)	OUTDOOR DB (°C)											
		35				40				46			
		Q	SHC	SHF	INPUT	Q	SHC	SHF	INPUT	Q	SHC	SHF	INPUT
21	18	2.45	1.81	0.74	588	2.25	1.67	0.74	624	2.08	1.54	0.74	648
21	20	2.58	1.60	0.62	612	2.40	1.49	0.62	642	2.23	1.38	0.62	678
22	18	2.45	1.91	0.78	588	2.25	1.76	0.78	624	2.08	1.62	0.78	648
22	20	2.58	1.70	0.66	612	2.40	1.58	0.66	642	2.23	1.47	0.66	678
22	22	2.73	1.47	0.54	636	2.55	1.38	0.54	672	2.38	1.28	0.54	696
23	18	2.45	2.01	0.82	588	2.25	1.85	0.82	624	2.08	1.70	0.82	648
23	20	2.58	1.80	0.70	612	2.40	1.68	0.70	642	2.23	1.56	0.70	678
23	22	2.73	1.58	0.58	636	2.55	1.48	0.58	672	2.38	1.38	0.58	696
24	18	2.45	2.11	0.86	588	2.25	1.94	0.86	624	2.08	1.78	0.86	648
24	20	2.58	1.91	0.74	612	2.40	1.78	0.74	642	2.23	1.65	0.74	678
24	22	2.73	1.69	0.62	636	2.55	1.58	0.62	672	2.38	1.47	0.62	696
24	24	2.88	1.44	0.50	660	2.70	1.35	0.50	690	2.55	1.28	0.50	720
25	18	2.45	2.21	0.90	588	2.25	2.03	0.90	624	2.08	1.87	0.9	648
25	20	2.58	2.01	0.78	612	2.40	1.87	0.78	642	2.23	1.74	0.78	678
25	22	2.73	1.80	0.66	636	2.55	1.68	0.66	672	2.38	1.57	0.66	696
25	24	2.88	1.55	0.54	660	2.70	1.46	0.54	690	2.55	1.38	0.54	720
26	18	2.45	2.30	0.94	588	2.25	2.12	0.94	624	2.08	1.95	0.94	648
26	20	2.58	2.11	0.82	612	2.40	1.97	0.82	642	2.23	1.82	0.82	678
26	22	2.73	1.91	0.70	636	2.55	1.79	0.70	672	2.38	1.66	0.70	696
26	24	2.88	1.67	0.58	660	2.70	1.57	0.58	690	2.55	1.48	0.58	720
26	26	3.03	1.39	0.46	684	2.85	1.31	0.46	714	2.68	1.23	0.46	744
27	18	2.45	2.40	0.98	588	2.25	2.21	0.98	624	2.08	2.03	0.98	648
27	20	2.58	2.21	0.86	612	2.40	2.06	0.86	642	2.23	1.91	0.86	678
27	22	2.73	2.02	0.74	636	2.55	1.89	0.74	672	2.38	1.76	0.74	696
27	24	2.88	1.78	0.62	660	2.70	1.67	0.62	690	2.55	1.58	0.62	720
27	26	3.03	1.51	0.50	684	2.85	1.43	0.50	714	2.68	1.34	0.50	744
28	18	2.45	2.45	1.00	588	2.25	2.25	1.00	624	2.08	2.08	1.00	648
28	20	2.58	2.32	0.90	612	2.40	2.16	0.90	642	2.23	2.00	0.90	678
28	22	2.73	2.13	0.78	636	2.55	1.99	0.78	672	2.38	1.85	0.78	696
28	24	2.88	1.90	0.66	660	2.70	1.78	0.66	690	2.55	1.68	0.66	720
28	26	3.03	1.63	0.54	684	2.85	1.54	0.54	714	2.68	1.44	0.54	744
29	18	2.45	2.45	1.00	588	2.25	2.25	1.00	624	2.08	2.08	1.00	648
29	20	2.58	2.42	0.94	612	2.40	2.26	0.94	642	2.23	2.09	0.94	678
29	22	2.73	2.23	0.82	636	2.55	2.09	0.82	672	2.38	1.95	0.82	696
29	24	2.88	2.01	0.70	660	2.70	1.89	0.70	690	2.55	1.79	0.70	720
29	26	3.03	1.75	0.58	684	2.85	1.65	0.58	714	2.68	1.55	0.58	744
30	18	2.45	2.45	1.00	588	2.25	2.25	1.00	624	2.08	2.08	1.00	648
30	20	2.58	2.52	0.98	612	2.40	2.35	0.98	642	2.23	2.18	0.98	678
30	22	2.73	2.34	0.86	636	2.55	2.19	0.86	672	2.38	2.04	0.86	696
30	24	2.88	2.13	0.74	660	2.70	2.00	0.74	690	2.55	1.89	0.74	720
30	26	3.03	1.88	0.62	684	2.85	1.77	0.62	714	2.68	1.66	0.62	744
31	18	2.45	2.45	1.00	588	2.25	2.25	1.00	624	2.08	2.08	1.00	648
31	20	2.58	2.58	1.00	612	2.40	2.40	1.00	642	2.23	2.23	1.00	678
31	22	2.73	2.45	0.90	636	2.55	2.30	0.90	672	2.38	2.14	0.90	696
31	24	2.88	2.24	0.78	660	2.70	2.11	0.78	690	2.55	1.99	0.78	720
31	26	3.03	2.00	0.66	684	2.85	1.88	0.66	714	2.68	1.77	0.66	744
32	18	2.45	2.45	1.00	588	2.25	2.25	1.00	624	2.08	2.08	1.00	648
32	20	2.58	2.58	1.00	612	2.40	2.40	1.00	642	2.23	2.23	1.00	678
32	22	2.73	2.56	0.94	636	2.55	2.40	0.94	672	2.38	2.23	0.94	696
32	24	2.88	2.36	0.82	660	2.70	2.21	0.82	690	2.55	2.09	0.82	720
32	26	3.03	2.12	0.70	684	2.85	2.00	0.70	714	2.68	1.87	0.70	744

NOTE Q : Total capacity (kW) SHF : Sensible heat factor DB : Dry-bulb temperature
SHC : Sensible heat capacity (kW) INPUT : Total power input (W) WB : Wet-bulb temperature

PERFORMANCE DATA COOL operation at Rated frequency

MUZ-AP35VG MUZ-AP35VGH

CAPACITY: 3.5 kW SHF: 0.88 INPUT: 990 W

INDOOR DB (°C)	INDOOR WB (°C)	OUTDOOR DB (°C)															
		21				25				27				30			
		Q	SHC	SHF	INPUT	Q	SHC	SHF	INPUT	Q	SHC	SHF	INPUT	Q	SHC	SHF	INPUT
21	18	4.11	2.88	0.70	792	3.94	2.76	0.70	832	3.78	2.65	0.70	871	3.64	2.55	0.70	911
21	20	4.29	2.49	0.58	832	4.11	2.39	0.58	881	3.99	2.31	0.58	901	3.85	2.23	0.58	941
22	18	4.11	3.04	0.74	792	3.94	2.91	0.74	832	3.78	2.80	0.74	871	3.64	2.69	0.74	911
22	20	4.29	2.66	0.62	832	4.11	2.55	0.62	881	3.99	2.47	0.62	901	3.85	2.39	0.62	941
22	22	4.46	2.23	0.50	861	4.31	2.15	0.50	916	4.20	2.10	0.50	941	4.03	2.01	0.50	980
23	18	4.11	3.21	0.78	792	3.94	3.07	0.78	832	3.78	2.95	0.78	871	3.64	2.84	0.78	911
23	20	4.29	2.83	0.66	832	4.11	2.71	0.66	881	3.99	2.63	0.66	901	3.85	2.54	0.66	941
23	22	4.46	2.41	0.54	861	4.31	2.32	0.54	916	4.20	2.27	0.54	941	4.03	2.17	0.54	980
24	18	4.11	3.37	0.82	792	3.94	3.23	0.82	832	3.78	3.10	0.82	871	3.64	2.98	0.82	911
24	20	4.29	3.00	0.70	832	4.11	2.88	0.70	881	3.99	2.79	0.70	901	3.85	2.70	0.70	941
24	22	4.46	2.59	0.58	861	4.31	2.50	0.58	916	4.20	2.44	0.58	941	4.03	2.33	0.58	980
24	24	4.69	2.16	0.46	901	4.52	2.08	0.46	950	4.41	2.03	0.46	980	4.27	1.96	0.46	1030
25	18	4.11	3.54	0.86	792	3.94	3.39	0.86	832	3.78	3.25	0.86	871	3.64	3.13	0.86	911
25	20	4.29	3.17	0.74	832	4.11	3.04	0.74	881	3.99	2.95	0.74	901	3.85	2.85	0.74	941
25	22	4.46	2.77	0.62	861	4.31	2.67	0.62	916	4.20	2.60	0.62	941	4.03	2.50	0.62	980
25	24	4.69	2.35	0.50	901	4.52	2.26	0.50	950	4.41	2.21	0.50	980	4.27	2.14	0.50	1030
26	18	4.11	3.70	0.90	792	3.94	3.54	0.90	832	3.78	3.40	0.90	871	3.64	3.28	0.90	911
26	20	4.29	3.34	0.78	832	4.11	3.21	0.78	881	3.99	3.11	0.78	901	3.85	3.00	0.78	941
26	22	4.46	2.95	0.66	861	4.31	2.84	0.66	916	4.20	2.77	0.66	941	4.03	2.66	0.66	980
26	24	4.69	2.53	0.54	901	4.52	2.44	0.54	950	4.41	2.38	0.54	980	4.27	2.31	0.54	1030
26	26	4.83	2.03	0.42	950	4.69	1.97	0.42	1000	4.62	1.94	0.42	1030	4.48	1.88	0.42	1059
27	18	4.11	3.87	0.94	792	3.94	3.70	0.94	832	3.78	3.55	0.94	871	3.64	3.42	0.94	911
27	20	4.29	3.52	0.82	832	4.11	3.37	0.82	881	3.99	3.27	0.82	901	3.85	3.16	0.82	941
27	22	4.46	3.12	0.70	861	4.31	3.01	0.70	916	4.20	2.94	0.70	941	4.03	2.82	0.70	980
27	24	4.69	2.72	0.58	901	4.52	2.62	0.58	950	4.41	2.56	0.58	980	4.27	2.48	0.58	1030
27	26	4.83	2.22	0.46	950	4.69	2.16	0.46	1000	4.62	2.13	0.46	1030	4.48	2.06	0.46	1059
28	18	4.11	4.03	0.98	792	3.94	3.86	0.98	832	3.78	3.70	0.98	871	3.64	3.57	0.98	911
28	20	4.29	3.69	0.86	832	4.11	3.54	0.86	881	3.99	3.43	0.86	901	3.85	3.31	0.86	941
28	22	4.46	3.30	0.74	861	4.31	3.19	0.74	916	4.20	3.11	0.74	941	4.03	2.98	0.74	980
28	24	4.69	2.91	0.62	901	4.52	2.80	0.62	950	4.41	2.73	0.62	980	4.27	2.65	0.62	1030
28	26	4.83	2.42	0.50	950	4.69	2.35	0.50	1000	4.62	2.31	0.50	1030	4.48	2.24	0.50	1059
29	18	4.11	4.11	1.00	792	3.94	3.94	1.00	832	3.78	3.78	1.00	871	3.64	3.64	1.00	911
29	20	4.29	3.86	0.90	832	4.11	3.70	0.90	881	3.99	3.59	0.90	901	3.85	3.47	0.90	941
29	22	4.46	3.48	0.78	861	4.31	3.36	0.78	916	4.20	3.28	0.78	941	4.03	3.14	0.78	980
29	24	4.69	3.10	0.66	901	4.52	2.98	0.66	950	4.41	2.91	0.66	980	4.27	2.82	0.66	1030
29	26	4.83	2.61	0.54	950	4.69	2.53	0.54	1000	4.62	2.49	0.54	1030	4.48	2.42	0.54	1059
30	18	4.11	4.11	1.00	792	3.94	3.94	1.00	832	3.78	3.78	1.00	871	3.64	3.64	1.00	911
30	20	4.29	4.03	0.94	832	4.11	3.87	0.94	881	3.99	3.75	0.94	901	3.85	3.62	0.94	941
30	22	4.46	3.66	0.82	861	4.31	3.53	0.82	916	4.20	3.44	0.82	941	4.03	3.30	0.82	980
30	24	4.69	3.28	0.70	901	4.52	3.16	0.70	950	4.41	3.09	0.70	980	4.27	2.99	0.70	1030
30	26	4.83	2.80	0.58	950	4.69	2.72	0.58	1000	4.62	2.68	0.58	1030	4.48	2.60	0.58	1059
31	18	4.11	4.11	1.00	792	3.94	3.94	1.00	832	3.78	3.78	1.00	871	3.64	3.64	1.00	911
31	20	4.29	4.20	0.98	832	4.11	4.03	0.98	881	3.99	3.91	0.98	901	3.85	3.77	0.98	941
31	22	4.46	3.84	0.86	861	4.31	3.70	0.86	916	4.20	3.61	0.86	941	4.03	3.46	0.86	980
31	24	4.69	3.47	0.74	901	4.52	3.34	0.74	950	4.41	3.26	0.74	980	4.27	3.16	0.74	1030
31	26	4.83	2.99	0.62	950	4.69	2.91	0.62	1000	4.62	2.86	0.62	1030	4.48	2.78	0.62	1059
32	18	4.11	4.11	1.00	792	3.94	3.94	1.00	832	3.78	3.78	1.00	871	3.64	3.64	1.00	911
32	20	4.29	4.29	1.00	832	4.11	4.11	1.00	881	3.99	3.99	1.00	901	3.85	3.85	1.00	941
32	22	4.46	4.02	0.90	861	4.31	3.87	0.90	916	4.20	3.78	0.90	941	4.03	3.62	0.90	980
32	24	4.69	3.66	0.78	901	4.52	3.52	0.78	950	4.41	3.44	0.78	980	4.27	3.33	0.78	1030
32	26	4.83	3.19	0.66	950	4.69	3.10	0.66	1000	4.62	3.05	0.66	1030	4.48	2.96	0.66	1059

NOTE Q : Total capacity (kW) SHF : Sensible heat factor DB : Dry-bulb temperature
SHC : Sensible heat capacity (kW) INPUT : Total power input (W) WB : Wet-bulb temperature

PERFORMANCE DATA COOL operation at Rated frequency

MUZ-AP35VG MUZ-AP35VGH

CAPACITY: 3.5 kW SHF: 0.88 INPUT: 990 W

INDOOR DB (°C)	INDOOR WB (°C)	OUTDOOR DB (°C)											
		35				40				46			
		Q	SHC	SHF	INPUT	Q	SHC	SHF	INPUT	Q	SHC	SHF	INPUT
21	18	3.43	2.40	0.70	970	3.15	2.21	0.70	1030	2.91	2.03	0.70	1069
21	20	3.61	2.09	0.58	1010	3.36	1.95	0.58	1059	3.12	1.81	0.58	1119
22	18	3.43	2.54	0.74	970	3.15	2.33	0.74	1030	2.91	2.15	0.74	1069
22	20	3.61	2.24	0.62	1010	3.36	2.08	0.62	1059	3.12	1.93	0.62	1119
22	22	3.82	1.91	0.50	1049	3.57	1.79	0.50	1109	3.33	1.66	0.50	1148
23	18	3.43	2.68	0.78	970	3.15	2.46	0.78	1030	2.91	2.27	0.78	1069
23	20	3.61	2.38	0.66	1010	3.36	2.22	0.66	1059	3.12	2.06	0.66	1119
23	22	3.82	2.06	0.54	1049	3.57	1.93	0.54	1109	3.33	1.80	0.54	1148
24	18	3.43	2.81	0.82	970	3.15	2.58	0.82	1030	2.91	2.38	0.82	1069
24	20	3.61	2.52	0.70	1010	3.36	2.35	0.70	1059	3.12	2.18	0.70	1119
24	22	3.82	2.21	0.58	1049	3.57	2.07	0.58	1109	3.33	1.93	0.58	1148
24	24	4.03	1.85	0.46	1089	3.78	1.74	0.46	1139	3.57	1.64	0.46	1188
25	18	3.43	2.95	0.86	970	3.15	2.71	0.86	1030	2.91	2.50	0.86	1069
25	20	3.61	2.67	0.74	1010	3.36	2.49	0.74	1059	3.12	2.31	0.74	1119
25	22	3.82	2.37	0.62	1049	3.57	2.21	0.62	1109	3.33	2.06	0.62	1148
25	24	4.03	2.01	0.50	1089	3.78	1.89	0.50	1139	3.57	1.79	0.50	1188
26	18	3.43	3.09	0.90	970	3.15	2.84	0.90	1030	2.91	2.61	0.90	1069
26	20	3.61	2.81	0.78	1010	3.36	2.62	0.78	1059	3.12	2.43	0.78	1119
26	22	3.82	2.52	0.66	1049	3.57	2.36	0.66	1109	3.33	2.19	0.66	1148
26	24	4.03	2.17	0.54	1089	3.78	2.04	0.54	1139	3.57	1.93	0.54	1188
26	26	4.24	1.78	0.42	1129	3.99	1.68	0.42	1178	3.75	1.57	0.42	1228
27	18	3.43	3.22	0.94	970	3.15	2.96	0.94	1030	2.91	2.73	0.94	1069
27	20	3.61	2.96	0.82	1010	3.36	2.76	0.82	1059	3.12	2.55	0.82	1119
27	22	3.82	2.67	0.70	1049	3.57	2.50	0.70	1109	3.33	2.33	0.70	1148
27	24	4.03	2.33	0.58	1089	3.78	2.19	0.58	1139	3.57	2.07	0.58	1188
27	26	4.24	1.95	0.46	1129	3.99	1.84	0.46	1178	3.75	1.72	0.46	1228
28	18	3.43	3.36	0.98	970	3.15	3.09	0.98	1030	2.91	2.85	0.98	1069
28	20	3.61	3.10	0.86	1010	3.36	2.89	0.86	1059	3.12	2.68	0.86	1119
28	22	3.82	2.82	0.74	1049	3.57	2.64	0.74	1109	3.33	2.46	0.74	1148
28	24	4.03	2.50	0.62	1089	3.78	2.34	0.62	1139	3.57	2.21	0.62	1188
28	26	4.24	2.12	0.50	1129	3.99	2.00	0.50	1178	3.75	1.87	0.50	1228
29	18	3.43	3.43	1.00	970	3.15	3.15	1.00	1030	2.91	2.91	1.00	1069
29	20	3.61	3.24	0.90	1010	3.36	3.02	0.90	1059	3.12	2.80	0.90	1119
29	22	3.82	2.98	0.78	1049	3.57	2.78	0.78	1109	3.33	2.59	0.78	1148
29	24	4.03	2.66	0.66	1089	3.78	2.49	0.66	1139	3.57	2.36	0.66	1188
29	26	4.24	2.29	0.54	1129	3.99	2.15	0.54	1178	3.75	2.02	0.54	1228
30	18	3.43	3.43	1.00	970	3.15	3.15	1.00	1030	2.91	2.91	1.00	1069
30	20	3.61	3.39	0.94	1010	3.36	3.16	0.94	1059	3.12	2.93	0.94	1119
30	22	3.82	3.13	0.82	1049	3.57	2.93	0.82	1109	3.33	2.73	0.82	1148
30	24	4.03	2.82	0.70	1089	3.78	2.65	0.70	1139	3.57	2.50	0.70	1188
30	26	4.24	2.46	0.58	1129	3.99	2.31	0.58	1178	3.75	2.17	0.58	1228
31	18	3.43	3.43	1.00	970	3.15	3.15	1.00	1030	2.91	2.91	1.00	1069
31	20	3.61	3.53	0.98	1010	3.36	3.29	0.98	1059	3.12	3.05	0.98	1119
31	22	3.82	3.28	0.86	1049	3.57	3.07	0.86	1109	3.33	2.86	0.86	1148
31	24	4.03	2.98	0.74	1089	3.78	2.80	0.74	1139	3.57	2.64	0.74	1188
31	26	4.24	2.63	0.62	1129	3.99	2.47	0.62	1178	3.75	2.32	0.62	1228
32	18	3.43	3.43	1.00	970	3.15	3.15	1.00	1030	2.91	2.91	1.00	1069
32	20	3.61	3.61	1.00	1010	3.36	3.36	1.00	1059	3.12	3.12	1.00	1119
32	22	3.82	3.43	0.90	1049	3.57	3.21	0.90	1109	3.33	2.99	0.90	1148
32	24	4.03	3.14	0.78	1089	3.78	2.95	0.78	1139	3.57	2.78	0.78	1188
32	26	4.24	2.80	0.66	1129	3.99	2.63	0.66	1178	3.75	2.47	0.66	1228

NOTE Q : Total capacity (kW) SHF : Sensible heat factor DB : Dry-bulb temperature
SHC : Sensible heat capacity (kW) INPUT : Total power input (W) WB : Wet-bulb temperature

PERFORMANCE DATA COOL operation at Rated frequency

MUZ-AP42VG MUZ-AP42VGH

CAPACITY: 4.2 kW SHF: 0.77 INPUT: 1300 W

INDOOR DB (°C)	INDOOR WB (°C)	OUTDOOR DB (°C)															
		21				25				27				30			
		Q	SHC	SHF	INPUT	Q	SHC	SHF	INPUT	Q	SHC	SHF	INPUT	Q	SHC	SHF	INPUT
21	18	4.94	2.91	0.59	1040	4.73	2.79	0.59	1092	4.54	2.68	0.59	1144	4.37	2.58	0.59	1196
21	20	5.15	2.42	0.47	1092	4.94	2.32	0.47	1157	4.79	2.25	0.47	1183	4.62	2.17	0.47	1235
22	18	4.94	3.11	0.63	1040	4.73	2.98	0.63	1092	4.54	2.86	0.63	1144	4.37	2.75	0.63	1196
22	20	5.15	2.62	0.51	1092	4.94	2.52	0.51	1157	4.79	2.44	0.51	1183	4.62	2.36	0.51	1235
22	22	5.36	2.09	0.39	1131	5.17	2.01	0.39	1203	5.04	1.97	0.39	1235	4.83	1.88	0.39	1287
23	18	4.94	3.31	0.67	1040	4.73	3.17	0.67	1092	4.54	3.04	0.67	1144	4.37	2.93	0.67	1196
23	20	5.15	2.83	0.55	1092	4.94	2.71	0.55	1157	4.79	2.63	0.55	1183	4.62	2.54	0.55	1235
23	22	5.36	2.30	0.43	1131	5.17	2.22	0.43	1203	5.04	2.17	0.43	1235	4.83	2.08	0.43	1287
24	18	4.94	3.50	0.71	1040	4.73	3.35	0.71	1092	4.54	3.22	0.71	1144	4.37	3.10	0.71	1196
24	20	5.15	3.04	0.59	1092	4.94	2.91	0.59	1157	4.79	2.82	0.59	1183	4.62	2.73	0.59	1235
24	22	5.36	2.52	0.47	1131	5.17	2.43	0.47	1203	5.04	2.37	0.47	1235	4.83	2.27	0.47	1287
24	24	5.63	1.97	0.35	1183	5.42	1.90	0.35	1248	5.29	1.85	0.35	1287	5.12	1.79	0.35	1352
25	18	4.94	3.70	0.75	1040	4.73	3.54	0.75	1092	4.54	3.40	0.75	1144	4.37	3.28	0.75	1196
25	20	5.15	3.24	0.63	1092	4.94	3.11	0.63	1157	4.79	3.02	0.63	1183	4.62	2.91	0.63	1235
25	22	5.36	2.73	0.51	1131	5.17	2.63	0.51	1203	5.04	2.57	0.51	1235	4.83	2.46	0.51	1287
25	24	5.63	2.19	0.39	1183	5.42	2.11	0.39	1248	5.29	2.06	0.39	1287	5.12	2.00	0.39	1352
26	18	4.94	3.90	0.79	1040	4.73	3.73	0.79	1092	4.54	3.58	0.79	1144	4.37	3.45	0.79	1196
26	20	5.15	3.45	0.67	1092	4.94	3.31	0.67	1157	4.79	3.21	0.67	1183	4.62	3.10	0.67	1235
26	22	5.36	2.95	0.55	1131	5.17	2.84	0.55	1203	5.04	2.77	0.55	1235	4.83	2.66	0.55	1287
26	24	5.63	2.42	0.43	1183	5.42	2.33	0.43	1248	5.29	2.28	0.43	1287	5.12	2.20	0.43	1352
26	26	5.80	1.80	0.31	1248	5.63	1.74	0.31	1313	5.54	1.72	0.31	1352	5.38	1.67	0.31	1391
27	18	4.94	4.10	0.83	1040	4.73	3.92	0.83	1092	4.54	3.76	0.83	1144	4.37	3.63	0.83	1196
27	20	5.15	3.65	0.71	1092	4.94	3.50	0.71	1157	4.79	3.40	0.71	1183	4.62	3.28	0.71	1235
27	22	5.36	3.16	0.59	1131	5.17	3.05	0.59	1203	5.04	2.97	0.59	1235	4.83	2.85	0.59	1287
27	24	5.63	2.65	0.47	1183	5.42	2.55	0.47	1248	5.29	2.49	0.47	1287	5.12	2.41	0.47	1352
27	26	5.80	2.03	0.35	1248	5.63	1.97	0.35	1313	5.54	1.94	0.35	1352	5.38	1.88	0.35	1391
28	18	4.94	4.29	0.87	1040	4.73	4.11	0.87	1092	4.54	3.95	0.87	1144	4.37	3.80	0.87	1196
28	20	5.15	3.86	0.75	1092	4.94	3.70	0.75	1157	4.79	3.59	0.75	1183	4.62	3.47	0.75	1235
28	22	5.36	3.37	0.63	1131	5.17	3.25	0.63	1203	5.04	3.18	0.63	1235	4.83	3.04	0.63	1287
28	24	5.63	2.87	0.51	1183	5.42	2.76	0.51	1248	5.29	2.70	0.51	1287	5.12	2.61	0.51	1352
28	26	5.80	2.26	0.39	1248	5.63	2.19	0.39	1313	5.54	2.16	0.39	1352	5.38	2.10	0.39	1391
29	18	4.94	4.49	0.91	1040	4.73	4.30	0.91	1092	4.54	4.13	0.91	1144	4.37	3.97	0.91	1196
29	20	5.15	4.06	0.79	1092	4.94	3.90	0.79	1157	4.79	3.78	0.79	1183	4.62	3.65	0.79	1235
29	22	5.36	3.59	0.67	1131	5.17	3.46	0.67	1203	5.04	3.38	0.67	1235	4.83	3.24	0.67	1287
29	24	5.63	3.10	0.55	1183	5.42	2.98	0.55	1248	5.29	2.91	0.55	1287	5.12	2.82	0.55	1352
29	26	5.80	2.49	0.43	1248	5.63	2.42	0.43	1313	5.54	2.38	0.43	1352	5.38	2.31	0.43	1391
30	18	4.94	4.69	0.95	1040	4.73	4.49	0.95	1092	4.54	4.31	0.95	1144	4.37	4.15	0.95	1196
30	20	5.15	4.27	0.83	1092	4.94	4.10	0.83	1157	4.79	3.97	0.83	1183	4.62	3.83	0.83	1235
30	22	5.36	3.80	0.71	1131	5.17	3.67	0.71	1203	5.04	3.58	0.71	1235	4.83	3.43	0.71	1287
30	24	5.63	3.32	0.59	1183	5.42	3.20	0.59	1248	5.29	3.12	0.59	1287	5.12	3.02	0.59	1352
30	26	5.80	2.72	0.47	1248	5.63	2.65	0.47	1313	5.54	2.61	0.47	1352	5.38	2.53	0.47	1391
31	18	4.94	4.89	0.99	1040	4.73	4.68	0.99	1092	4.54	4.49	0.99	1144	4.37	4.32	0.99	1196
31	20	5.15	4.48	0.87	1092	4.94	4.29	0.87	1157	4.79	4.17	0.87	1183	4.62	4.02	0.87	1235
31	22	5.36	4.02	0.75	1131	5.17	3.87	0.75	1203	5.04	3.78	0.75	1235	4.83	3.62	0.75	1287
31	24	5.63	3.55	0.63	1183	5.42	3.41	0.63	1248	5.29	3.33	0.63	1287	5.12	3.23	0.63	1352
31	26	5.80	2.96	0.51	1248	5.63	2.87	0.51	1313	5.54	2.83	0.51	1352	5.38	2.74	0.51	1391
32	18	4.94	4.94	1.00	1040	4.73	4.73	1.00	1092	4.54	4.54	1.00	1144	4.37	4.37	1.00	1196
32	20	5.15	4.68	0.91	1092	4.94	4.49	0.91	1157	4.79	4.36	0.91	1183	4.62	4.20	0.91	1235
32	22	5.36	4.23	0.79	1131	5.17	4.08	0.79	1203	5.04	3.98	0.79	1235	4.83	3.82	0.79	1287
32	24	5.63	3.77	0.67	1183	5.42	3.63	0.67	1248	5.29	3.55	0.67	1287	5.12	3.43	0.67	1352
32	26	5.80	3.19	0.55	1248	5.63	3.10	0.55	1313	5.54	3.05	0.55	1352	5.38	2.96	0.55	1391

NOTE Q : Total capacity (kW) SHF : Sensible heat factor DB : Dry-bulb temperature
SHC : Sensible heat capacity (kW) INPUT : Total power input (W) WB : Wet-bulb temperature

PERFORMANCE DATA COOL operation at Rated frequency

MUZ-AP42VG MUZ-AP42VGH

CAPACITY: 4.2 kW SHF: 0.77 INPUT: 1300 W

INDOOR DB (°C)	INDOOR WB (°C)	OUTDOOR DB (°C)											
		35				40				46			
		Q	SHC	SHF	INPUT	Q	SHC	SHF	INPUT	Q	SHC	SHF	INPUT
21	18	4.12	2.43	0.59	1274	3.78	2.23	0.59	1352	3.49	2.06	0.59	1404
21	20	4.33	2.03	0.47	1326	4.03	1.90	0.47	1391	3.74	1.76	0.47	1469
22	18	4.12	2.59	0.63	1274	3.78	2.38	0.63	1352	3.49	2.20	0.63	1404
22	20	4.33	2.21	0.51	1326	4.03	2.06	0.51	1391	3.74	1.91	0.51	1469
22	22	4.58	1.79	0.39	1378	4.28	1.67	0.39	1456	3.99	1.56	0.39	1508
23	18	4.12	2.76	0.67	1274	3.78	2.53	0.67	1352	3.49	2.34	0.67	1404
23	20	4.33	2.38	0.55	1326	4.03	2.22	0.55	1391	3.74	2.06	0.55	1469
23	22	4.58	1.97	0.43	1378	4.28	1.84	0.43	1456	3.99	1.72	0.43	1508
24	18	4.12	2.92	0.71	1274	3.78	2.68	0.71	1352	3.49	2.48	0.71	1404
24	20	4.33	2.55	0.59	1326	4.03	2.38	0.59	1391	3.74	2.21	0.59	1469
24	22	4.58	2.15	0.47	1378	4.28	2.01	0.47	1456	3.99	1.88	0.47	1508
24	24	4.83	1.69	0.35	1430	4.54	1.59	0.35	1495	4.28	1.50	0.35	1560
25	18	4.12	3.09	0.75	1274	3.78	2.84	0.75	1352	3.49	2.61	0.75	1404
25	20	4.33	2.73	0.63	1326	4.03	2.54	0.63	1391	3.74	2.35	0.63	1469
25	22	4.58	2.33	0.51	1378	4.28	2.18	0.51	1456	3.99	2.03	0.51	1508
25	24	4.83	1.88	0.39	1430	4.54	1.77	0.39	1495	4.28	1.67	0.39	1560
26	18	4.12	3.25	0.79	1274	3.78	2.99	0.79	1352	3.49	2.75	0.79	1404
26	20	4.33	2.90	0.67	1326	4.03	2.70	0.67	1391	3.74	2.50	0.67	1469
26	22	4.58	2.52	0.55	1378	4.28	2.36	0.55	1456	3.99	2.19	0.55	1508
26	24	4.83	2.08	0.43	1430	4.54	1.95	0.43	1495	4.28	1.84	0.43	1560
26	26	5.08	1.58	0.31	1482	4.79	1.48	0.31	1547	4.49	1.39	0.31	1612
27	18	4.12	3.42	0.83	1274	3.78	3.14	0.83	1352	3.49	2.89	0.83	1404
27	20	4.33	3.07	0.71	1326	4.03	2.86	0.71	1391	3.74	2.65	0.71	1469
27	22	4.58	2.70	0.59	1378	4.28	2.53	0.59	1456	3.99	2.35	0.59	1508
27	24	4.83	2.27	0.47	1430	4.54	2.13	0.47	1495	4.28	2.01	0.47	1560
27	26	5.08	1.78	0.35	1482	4.79	1.68	0.35	1547	4.49	1.57	0.35	1612
28	18	4.12	3.58	0.87	1274	3.78	3.29	0.87	1352	3.49	3.03	0.87	1404
28	20	4.33	3.24	0.75	1326	4.03	3.02	0.75	1391	3.74	2.80	0.75	1469
28	22	4.58	2.88	0.63	1378	4.28	2.70	0.63	1456	3.99	2.51	0.63	1508
28	24	4.83	2.46	0.51	1430	4.54	2.31	0.51	1495	4.28	2.18	0.51	1560
28	26	5.08	1.98	0.39	1482	4.79	1.87	0.39	1547	4.49	1.75	0.39	1612
29	18	4.12	3.75	0.91	1274	3.78	3.44	0.91	1352	3.49	3.17	0.91	1404
29	20	4.33	3.42	0.79	1326	4.03	3.19	0.79	1391	3.74	2.95	0.79	1469
29	22	4.58	3.07	0.67	1378	4.28	2.87	0.67	1456	3.99	2.67	0.67	1508
29	24	4.83	2.66	0.55	1430	4.54	2.49	0.55	1495	4.28	2.36	0.55	1560
29	26	5.08	2.19	0.43	1482	4.79	2.06	0.43	1547	4.49	1.93	0.43	1612
30	18	4.12	3.91	0.95	1274	3.78	3.59	0.95	1352	3.49	3.31	0.95	1404
30	20	4.33	3.59	0.83	1326	4.03	3.35	0.83	1391	3.74	3.10	0.83	1469
30	22	4.58	3.25	0.71	1378	4.28	3.04	0.71	1456	3.99	2.83	0.71	1508
30	24	4.83	2.85	0.59	1430	4.54	2.68	0.59	1495	4.28	2.53	0.59	1560
30	26	5.08	2.39	0.47	1482	4.79	2.25	0.47	1547	4.49	2.11	0.47	1612
31	18	4.12	4.07	0.99	1274	3.78	3.74	0.99	1352	3.49	3.45	0.99	1404
31	20	4.33	3.76	0.87	1326	4.03	3.51	0.87	1391	3.74	3.25	0.87	1469
31	22	4.58	3.43	0.75	1378	4.28	3.21	0.75	1456	3.99	2.99	0.75	1508
31	24	4.83	3.04	0.63	1430	4.54	2.86	0.63	1495	4.28	2.70	0.63	1560
31	26	5.08	2.59	0.51	1482	4.79	2.44	0.51	1547	4.49	2.29	0.51	1612
32	18	4.12	4.12	1.00	1274	3.78	3.78	1.00	1352	3.49	3.49	1.00	1404
32	20	4.33	3.94	0.91	1326	4.03	3.67	0.91	1391	3.74	3.40	0.91	1469
32	22	4.58	3.62	0.79	1378	4.28	3.38	0.79	1456	3.99	3.15	0.79	1508
32	24	4.83	3.24	0.67	1430	4.54	3.04	0.67	1495	4.28	2.87	0.67	1560
32	26	5.08	2.80	0.55	1482	4.79	2.63	0.55	1547	4.49	2.47	0.55	1612

NOTE Q : Total capacity (kW) SHF : Sensible heat factor DB : Dry-bulb temperature
SHC : Sensible heat capacity (kW) INPUT : Total power input (W) WB : Wet-bulb temperature

PERFORMANCE DATA COOL operation at Rated frequency

MUZ-AP50VG MUZ-AP50VGH

CAPACITY: 5.0 kW SHF: 0.74 INPUT: 1550 W

INDOOR DB (°C)	INDOOR WB (°C)	OUTDOOR DB (°C)															
		21				25				27				30			
		Q	SHC	SHF	INPUT	Q	SHC	SHF	INPUT	Q	SHC	SHF	INPUT	Q	SHC	SHF	INPUT
21	18	5.88	3.29	0.56	1240	5.63	3.15	0.56	1302	5.40	3.02	0.56	1364	5.20	2.91	0.56	1426
21	20	6.13	2.70	0.44	1302	5.88	2.59	0.44	1380	5.70	2.51	0.44	1411	5.50	2.42	0.44	1473
22	18	5.88	3.53	0.60	1240	5.63	3.38	0.60	1302	5.40	3.24	0.60	1364	5.20	3.12	0.60	1426
22	20	6.13	2.94	0.48	1302	5.88	2.82	0.48	1380	5.70	2.74	0.48	1411	5.50	2.64	0.48	1473
22	22	6.38	2.30	0.36	1349	6.15	2.21	0.36	1434	6.00	2.16	0.36	1473	5.75	2.07	0.36	1535
23	18	5.88	3.76	0.64	1240	5.63	3.60	0.64	1302	5.40	3.46	0.64	1364	5.20	3.33	0.64	1426
23	20	6.13	3.19	0.52	1302	5.88	3.06	0.52	1380	5.70	2.96	0.52	1411	5.50	2.86	0.52	1473
23	22	6.38	2.55	0.40	1349	6.15	2.46	0.40	1434	6.00	2.40	0.40	1473	5.75	2.30	0.40	1535
24	18	5.88	4.00	0.68	1240	5.63	3.83	0.68	1302	5.40	3.67	0.68	1364	5.20	3.54	0.68	1426
24	20	6.13	3.43	0.56	1302	5.88	3.29	0.56	1380	5.70	3.19	0.56	1411	5.50	3.08	0.56	1473
24	22	6.38	2.81	0.44	1349	6.15	2.71	0.44	1434	6.00	2.64	0.44	1473	5.75	2.53	0.44	1535
24	24	6.70	2.14	0.32	1411	6.45	2.06	0.32	1488	6.30	2.02	0.32	1535	6.10	1.95	0.32	1612
25	18	5.88	4.23	0.72	1240	5.63	4.05	0.72	1302	5.40	3.89	0.72	1364	5.20	3.74	0.72	1426
25	20	6.13	3.68	0.60	1302	5.88	3.53	0.60	1380	5.70	3.42	0.60	1411	5.50	3.30	0.60	1473
25	22	6.38	3.06	0.48	1349	6.15	2.95	0.48	1434	6.00	2.88	0.48	1473	5.75	2.76	0.48	1535
25	24	6.70	2.41	0.36	1411	6.45	2.32	0.36	1488	6.30	2.27	0.36	1535	6.10	2.20	0.36	1612
26	18	5.88	4.47	0.76	1240	5.63	4.28	0.76	1302	5.40	4.10	0.76	1364	5.20	3.95	0.76	1426
26	20	6.13	3.92	0.64	1302	5.88	3.76	0.64	1380	5.70	3.65	0.64	1411	5.50	3.52	0.64	1473
26	22	6.38	3.32	0.52	1349	6.15	3.20	0.52	1434	6.00	3.12	0.52	1473	5.75	2.99	0.52	1535
26	24	6.70	2.68	0.40	1411	6.45	2.58	0.40	1488	6.30	2.52	0.40	1535	6.10	2.44	0.40	1612
26	26	6.90	1.93	0.28	1488	6.70	1.88	0.28	1566	6.60	1.85	0.28	1612	6.40	1.79	0.28	1659
27	18	5.88	4.70	0.80	1240	5.63	4.50	0.80	1302	5.40	4.32	0.80	1364	5.20	4.16	0.80	1426
27	20	6.13	4.17	0.68	1302	5.88	4.00	0.68	1380	5.70	3.88	0.68	1411	5.50	3.74	0.68	1473
27	22	6.38	3.57	0.56	1349	6.15	3.44	0.56	1434	6.00	3.36	0.56	1473	5.75	3.22	0.56	1535
27	24	6.70	2.95	0.44	1411	6.45	2.84	0.44	1488	6.30	2.77	0.44	1535	6.10	2.68	0.44	1612
27	26	6.90	2.21	0.32	1488	6.70	2.14	0.32	1566	6.60	2.11	0.32	1612	6.40	2.05	0.32	1659
28	18	5.88	4.94	0.84	1240	5.63	4.73	0.84	1302	5.40	4.54	0.84	1364	5.20	4.37	0.84	1426
28	20	6.13	4.41	0.72	1302	5.88	4.23	0.72	1380	5.70	4.10	0.72	1411	5.50	3.96	0.72	1473
28	22	6.38	3.83	0.60	1349	6.15	3.69	0.60	1434	6.00	3.60	0.60	1473	5.75	3.45	0.60	1535
28	24	6.70	3.22	0.48	1411	6.45	3.10	0.48	1488	6.30	3.02	0.48	1535	6.10	2.93	0.48	1612
28	26	6.90	2.48	0.36	1488	6.70	2.41	0.36	1566	6.60	2.38	0.36	1612	6.40	2.30	0.36	1659
29	18	5.88	5.17	0.88	1240	5.63	4.95	0.88	1302	5.40	4.75	0.88	1364	5.20	4.58	0.88	1426
29	20	6.13	4.66	0.76	1302	5.88	4.47	0.76	1380	5.70	4.33	0.76	1411	5.50	4.18	0.76	1473
29	22	6.38	4.08	0.64	1349	6.15	3.94	0.64	1434	6.00	3.84	0.64	1473	5.75	3.68	0.64	1535
29	24	6.70	3.48	0.52	1411	6.45	3.35	0.52	1488	6.30	3.28	0.52	1535	6.10	3.17	0.52	1612
29	26	6.90	2.76	0.40	1488	6.70	2.68	0.40	1566	6.60	2.64	0.40	1612	6.40	2.56	0.40	1659
30	18	5.88	5.41	0.92	1240	5.63	5.18	0.92	1302	5.40	4.97	0.92	1364	5.20	4.78	0.92	1426
30	20	6.13	4.90	0.80	1302	5.88	4.70	0.80	1380	5.70	4.56	0.80	1411	5.50	4.40	0.80	1473
30	22	6.38	4.34	0.68	1349	6.15	4.18	0.68	1434	6.00	4.08	0.68	1473	5.75	3.91	0.68	1535
30	24	6.70	3.75	0.56	1411	6.45	3.61	0.56	1488	6.30	3.53	0.56	1535	6.10	3.42	0.56	1612
30	26	6.90	3.04	0.44	1488	6.70	2.95	0.44	1566	6.60	2.90	0.44	1612	6.40	2.82	0.44	1659
31	18	5.88	5.64	0.96	1240	5.63	5.40	0.96	1302	5.40	5.18	0.96	1364	5.20	4.99	0.96	1426
31	20	6.13	5.15	0.84	1302	5.88	4.94	0.84	1380	5.70	4.79	0.84	1411	5.50	4.62	0.84	1473
31	22	6.38	4.59	0.72	1349	6.15	4.43	0.72	1434	6.00	4.32	0.72	1473	5.75	4.14	0.72	1535
31	24	6.70	4.02	0.60	1411	6.45	3.87	0.60	1488	6.30	3.78	0.60	1535	6.10	3.66	0.60	1612
31	26	6.90	3.31	0.48	1488	6.70	3.22	0.48	1566	6.60	3.17	0.48	1612	6.40	3.07	0.48	1659
32	18	5.88	5.88	1.00	1240	5.63	5.63	1.00	1302	5.40	5.40	1.00	1364	5.20	5.20	1.00	1426
32	20	6.13	5.39	0.88	1302	5.88	5.17	0.88	1380	5.70	5.02	0.88	1411	5.50	4.84	0.88	1473
32	22	6.38	4.85	0.76	1349	6.15	4.67	0.76	1434	6.00	4.56	0.76	1473	5.75	4.37	0.76	1535
32	24	6.70	4.29	0.64	1411	6.45	4.13	0.64	1488	6.30	4.03	0.64	1535	6.10	3.90	0.64	1612
32	26	6.90	3.59	0.52	1488	6.70	3.48	0.52	1566	6.60	3.43	0.52	1612	6.40	3.33	0.52	1659

NOTE Q : Total capacity (kW) SHF : Sensible heat factor DB : Dry-bulb temperature
SHC : Sensible heat capacity (kW) INPUT : Total power input (W) WB : Wet-bulb temperature

PERFORMANCE DATA COOL operation at Rated frequency

MUZ-AP50VG MUZ-AP50VGH

CAPACITY: 5.0 kW SHF: 0.74 INPUT: 1550 W

INDOOR DB (°C)	INDOOR WB (°C)	OUTDOOR DB (°C)											
		35				40				46			
		Q	SHC	SHF	INPUT	Q	SHC	SHF	INPUT	Q	SHC	SHF	INPUT
21	18	4.90	2.74	0.56	1519	4.50	2.52	0.56	1612	4.15	2.32	0.56	1674
21	20	5.15	2.27	0.44	1581	4.80	2.11	0.44	1659	4.45	1.96	0.44	1752
22	18	4.90	2.94	0.60	1519	4.50	2.70	0.60	1612	4.15	2.49	0.60	1674
22	20	5.15	2.47	0.48	1581	4.80	2.30	0.48	1659	4.45	2.14	0.48	1752
22	22	5.45	1.96	0.36	1643	5.10	1.84	0.36	1736	4.75	1.71	0.36	1798
23	18	4.90	3.14	0.64	1519	4.50	2.88	0.64	1612	4.15	2.66	0.64	1674
23	20	5.15	2.68	0.52	1581	4.80	2.50	0.52	1659	4.45	2.31	0.52	1752
23	22	5.45	2.18	0.40	1643	5.10	2.04	0.40	1736	4.75	1.90	0.40	1798
24	18	4.90	3.33	0.68	1519	4.50	3.06	0.68	1612	4.15	2.82	0.68	1674
24	20	5.15	2.88	0.56	1581	4.80	2.69	0.56	1659	4.45	2.49	0.56	1752
24	22	5.45	2.40	0.44	1643	5.10	2.24	0.44	1736	4.75	2.09	0.44	1798
24	24	5.75	1.84	0.32	1705	5.40	1.73	0.32	1783	5.10	1.63	0.32	1860
25	18	4.90	3.53	0.72	1519	4.50	3.24	0.72	1612	4.15	2.99	0.72	1674
25	20	5.15	3.09	0.60	1581	4.80	2.88	0.60	1659	4.45	2.67	0.60	1752
25	22	5.45	2.62	0.48	1643	5.10	2.45	0.48	1736	4.75	2.28	0.48	1798
25	24	5.75	2.07	0.36	1705	5.40	1.94	0.36	1783	5.10	1.84	0.36	1860
26	18	4.90	3.72	0.76	1519	4.50	3.42	0.76	1612	4.15	3.15	0.76	1674
26	20	5.15	3.30	0.64	1581	4.80	3.07	0.64	1659	4.45	2.85	0.64	1752
26	22	5.45	2.83	0.52	1643	5.10	2.65	0.52	1736	4.75	2.47	0.52	1798
26	24	5.75	2.30	0.40	1705	5.40	2.16	0.40	1783	5.10	2.04	0.40	1860
26	26	6.05	1.69	0.28	1767	5.70	1.60	0.28	1845	5.35	1.50	0.28	1922
27	18	4.90	3.92	0.80	1519	4.50	3.60	0.80	1612	4.15	3.32	0.80	1674
27	20	5.15	3.50	0.68	1581	4.80	3.26	0.68	1659	4.45	3.03	0.68	1752
27	22	5.45	3.05	0.56	1643	5.10	2.86	0.56	1736	4.75	2.66	0.56	1798
27	24	5.75	2.53	0.44	1705	5.40	2.38	0.44	1783	5.10	2.24	0.44	1860
27	26	6.05	1.94	0.32	1767	5.70	1.82	0.32	1845	5.35	1.71	0.32	1922
28	18	4.90	4.12	0.84	1519	4.50	3.78	0.84	1612	4.15	3.49	0.84	1674
28	20	5.15	3.71	0.72	1581	4.80	3.46	0.72	1659	4.45	3.20	0.72	1752
28	22	5.45	3.27	0.60	1643	5.10	3.06	0.60	1736	4.75	2.85	0.60	1798
28	24	5.75	2.76	0.48	1705	5.40	2.59	0.48	1783	5.10	2.45	0.48	1860
28	26	6.05	2.18	0.36	1767	5.70	2.05	0.36	1845	5.35	1.93	0.36	1922
29	18	4.90	4.31	0.88	1519	4.50	3.96	0.88	1612	4.15	3.65	0.88	1674
29	20	5.15	3.91	0.76	1581	4.80	3.65	0.76	1659	4.45	3.38	0.76	1752
29	22	5.45	3.49	0.64	1643	5.10	3.26	0.64	1736	4.75	3.04	0.64	1798
29	24	5.75	2.99	0.52	1705	5.40	2.81	0.52	1783	5.10	2.65	0.52	1860
29	26	6.05	2.42	0.40	1767	5.70	2.28	0.40	1845	5.35	2.14	0.40	1922
30	18	4.90	4.51	0.92	1519	4.50	4.14	0.92	1612	4.15	3.82	0.92	1674
30	20	5.15	4.12	0.80	1581	4.80	3.84	0.80	1659	4.45	3.56	0.80	1752
30	22	5.45	3.71	0.68	1643	5.10	3.47	0.68	1736	4.75	3.23	0.68	1798
30	24	5.75	3.22	0.56	1705	5.40	3.02	0.56	1783	5.10	2.86	0.56	1860
30	26	6.05	2.66	0.44	1767	5.70	2.51	0.44	1845	5.35	2.35	0.44	1922
31	18	4.90	4.70	0.96	1519	4.50	4.32	0.96	1612	4.15	3.98	0.96	1674
31	20	5.15	4.33	0.84	1581	4.80	4.03	0.84	1659	4.45	3.74	0.84	1752
31	22	5.45	3.92	0.72	1643	5.10	3.67	0.72	1736	4.75	3.42	0.72	1798
31	24	5.75	3.45	0.60	1705	5.40	3.24	0.60	1783	5.10	3.06	0.60	1860
31	26	6.05	2.90	0.48	1767	5.70	2.74	0.48	1845	5.35	2.57	0.48	1922
32	18	4.90	4.90	1.00	1519	4.50	4.50	1.00	1612	4.15	4.15	1.00	1674
32	20	5.15	4.53	0.88	1581	4.80	4.22	0.88	1659	4.45	3.92	0.88	1752
32	22	5.45	4.14	0.76	1643	5.10	3.88	0.76	1736	4.75	3.61	0.76	1798
32	24	5.75	3.68	0.64	1705	5.40	3.46	0.64	1783	5.10	3.26	0.64	1860
32	26	6.05	3.15	0.52	1767	5.70	2.96	0.52	1845	5.35	2.78	0.52	1922

NOTE Q : Total capacity (kW) SHF : Sensible heat factor DB : Dry-bulb temperature
SHC : Sensible heat capacity (kW) INPUT : Total power input (W) WB : Wet-bulb temperature

PERFORMANCE DATA COOL operation at Rated frequency

MUZ-AP60VG

CAPACITY: 6.1 kW SHF: 0.83 INPUT: 1590 W

INDOOR DB (°C)	INDOOR WB (°C)	OUTDOOR DB (°C)															
		21				25				27				30			
		Q	SHC	SHF	INPUT	Q	SHC	SHF	INPUT	Q	SHC	SHF	INPUT	Q	SHC	SHF	INPUT
21	18	7.17	4.66	0.65	1272	6.86	4.46	0.65	1336	6.59	4.28	0.65	1399	6.34	4.12	0.65	1463
21	20	7.47	3.96	0.53	1336	7.17	3.80	0.53	1415	6.95	3.69	0.53	1447	6.71	3.56	0.53	1511
22	18	7.17	4.95	0.69	1272	6.86	4.74	0.69	1336	6.59	4.55	0.69	1399	6.34	4.38	0.69	1463
22	20	7.47	4.26	0.57	1336	7.17	4.09	0.57	1415	6.95	3.96	0.57	1447	6.71	3.82	0.57	1511
22	22	7.78	3.50	0.45	1383	7.50	3.38	0.45	1471	7.32	3.29	0.45	1511	7.02	3.16	0.45	1574
23	18	7.17	5.23	0.73	1272	6.86	5.01	0.73	1336	6.59	4.81	0.73	1399	6.34	4.63	0.73	1463
23	20	7.47	4.56	0.61	1336	7.17	4.37	0.61	1415	6.95	4.24	0.61	1447	6.71	4.09	0.61	1511
23	22	7.78	3.81	0.49	1383	7.50	3.68	0.49	1471	7.32	3.59	0.49	1511	7.02	3.44	0.49	1574
24	18	7.17	5.52	0.77	1272	6.86	5.28	0.77	1336	6.59	5.07	0.77	1399	6.34	4.88	0.77	1463
24	20	7.47	4.86	0.65	1336	7.17	4.66	0.65	1415	6.95	4.52	0.65	1447	6.71	4.36	0.65	1511
24	22	7.78	4.12	0.53	1383	7.50	3.98	0.53	1471	7.32	3.88	0.53	1511	7.02	3.72	0.53	1574
24	24	8.17	3.35	0.41	1447	7.87	3.23	0.41	1526	7.69	3.15	0.41	1574	7.44	3.05	0.41	1654
25	18	7.17	5.81	0.81	1272	6.86	5.56	0.81	1336	6.59	5.34	0.81	1399	6.34	5.14	0.81	1463
25	20	7.47	5.16	0.69	1336	7.17	4.95	0.69	1415	6.95	4.80	0.69	1447	6.71	4.63	0.69	1511
25	22	7.78	4.43	0.57	1383	7.50	4.28	0.57	1471	7.32	4.17	0.57	1511	7.02	4.00	0.57	1574
25	24	8.17	3.68	0.45	1447	7.87	3.54	0.45	1526	7.69	3.46	0.45	1574	7.44	3.35	0.45	1654
26	18	7.17	6.09	0.85	1272	6.86	5.83	0.85	1336	6.59	5.60	0.85	1399	6.34	5.39	0.85	1463
26	20	7.47	5.45	0.73	1336	7.17	5.23	0.73	1415	6.95	5.08	0.73	1447	6.71	4.90	0.73	1511
26	22	7.78	4.74	0.61	1383	7.50	4.58	0.61	1471	7.32	4.47	0.61	1511	7.02	4.28	0.61	1574
26	24	8.17	4.01	0.49	1447	7.87	3.86	0.49	1526	7.69	3.77	0.49	1574	7.44	3.65	0.49	1654
26	26	8.42	3.11	0.37	1526	8.17	3.02	0.37	1606	8.05	2.98	0.37	1654	7.81	2.89	0.37	1701
27	18	7.17	6.38	0.89	1272	6.86	6.11	0.89	1336	6.59	5.86	0.89	1399	6.34	5.65	0.89	1463
27	20	7.47	5.75	0.77	1336	7.17	5.52	0.77	1415	6.95	5.35	0.77	1447	6.71	5.17	0.77	1511
27	22	7.78	5.06	0.65	1383	7.50	4.88	0.65	1471	7.32	4.76	0.65	1511	7.02	4.56	0.65	1574
27	24	8.17	4.33	0.53	1447	7.87	4.17	0.53	1526	7.69	4.07	0.53	1574	7.44	3.94	0.53	1654
27	26	8.42	3.45	0.41	1526	8.17	3.35	0.41	1606	8.05	3.30	0.41	1654	7.81	3.20	0.41	1701
28	18	7.17	6.67	0.93	1272	6.86	6.38	0.93	1336	6.59	6.13	0.93	1399	6.34	5.90	0.93	1463
28	20	7.47	6.05	0.81	1336	7.17	5.81	0.81	1415	6.95	5.63	0.81	1447	6.71	5.44	0.81	1511
28	22	7.78	5.37	0.69	1383	7.50	5.18	0.69	1471	7.32	5.05	0.69	1511	7.02	4.84	0.69	1574
28	24	8.17	4.66	0.57	1447	7.87	4.49	0.57	1526	7.69	4.38	0.57	1574	7.44	4.24	0.57	1654
28	26	8.42	3.79	0.45	1526	8.17	3.68	0.45	1606	8.05	3.62	0.45	1654	7.81	3.51	0.45	1701
29	18	7.17	6.95	0.97	1272	6.86	6.66	0.97	1336	6.59	6.39	0.97	1399	6.34	6.15	0.97	1463
29	20	7.47	6.35	0.85	1336	7.17	6.09	0.85	1415	6.95	5.91	0.85	1447	6.71	5.70	0.85	1511
29	22	7.78	5.68	0.73	1383	7.50	5.48	0.73	1471	7.32	5.34	0.73	1511	7.02	5.12	0.73	1574
29	24	8.17	4.99	0.61	1447	7.87	4.80	0.61	1526	7.69	4.69	0.61	1574	7.44	4.54	0.61	1654
29	26	8.42	4.12	0.49	1526	8.17	4.01	0.49	1606	8.05	3.95	0.49	1654	7.81	3.83	0.49	1701
30	18	7.17	7.17	1.00	1272	6.86	6.86	1.00	1336	6.59	6.59	1.00	1399	6.34	6.34	1.00	1463
30	20	7.47	6.65	0.89	1336	7.17	6.38	0.89	1415	6.95	6.19	0.89	1447	6.71	5.97	0.89	1511
30	22	7.78	5.99	0.77	1383	7.50	5.78	0.77	1471	7.32	5.64	0.77	1511	7.02	5.40	0.77	1574
30	24	8.17	5.31	0.65	1447	7.87	5.11	0.65	1526	7.69	5.00	0.65	1574	7.44	4.84	0.65	1654
30	26	8.42	4.46	0.53	1526	8.17	4.33	0.53	1606	8.05	4.27	0.53	1654	7.81	4.14	0.53	1701
31	18	7.17	7.17	1.00	1272	6.86	6.86	1.00	1336	6.59	6.59	1.00	1399	6.34	6.34	1.00	1463
31	20	7.47	6.95	0.93	1336	7.17	6.67	0.93	1415	6.95	6.47	0.93	1447	6.71	6.24	0.93	1511
31	22	7.78	6.30	0.81	1383	7.50	6.08	0.81	1471	7.32	5.93	0.81	1511	7.02	5.68	0.81	1574
31	24	8.17	5.64	0.69	1447	7.87	5.43	0.69	1526	7.69	5.30	0.69	1574	7.44	5.13	0.69	1654
31	26	8.42	4.80	0.57	1526	8.17	4.66	0.57	1606	8.05	4.59	0.57	1654	7.81	4.45	0.57	1701
32	18	7.17	7.17	1.00	1272	6.86	6.86	1.00	1336	6.59	6.59	1.00	1399	6.34	6.34	1.00	1463
32	20	7.47	7.25	0.97	1336	7.17	6.95	0.97	1415	6.95	6.75	0.97	1447	6.71	6.51	0.97	1511
32	22	7.78	6.61	0.85	1383	7.50	6.38	0.85	1471	7.32	6.22	0.85	1511	7.02	5.96	0.85	1574
32	24	8.17	5.97	0.73	1447	7.87	5.74	0.73	1526	7.69	5.61	0.73	1574	7.44	5.43	0.73	1654
32	26	8.42	5.13	0.61	1526	8.17	4.99	0.61	1606	8.05	4.91	0.61	1654	7.81	4.76	0.61	1701

NOTE Q : Total capacity (kW) SHF : Sensible heat factor DB : Dry-bulb temperature
SHC : Sensible heat capacity (kW) INPUT : Total power input (W) WB : Wet-bulb temperature

PERFORMANCE DATA COOL operation at Rated frequency

MUZ-AP60VG

CAPACITY: 6.1 kW SHF: 0.83 INPUT: 1590 W

INDOOR DB (°C)	INDOOR WB (°C)	OUTDOOR DB (°C)											
		35				40				46			
		Q	SHC	SHF	INPUT	Q	SHC	SHF	INPUT	Q	SHC	SHF	INPUT
21	18	5.98	3.89	0.65	1558	5.49	3.57	0.65	1654	5.06	3.29	0.65	1717
21	20	6.28	3.33	0.53	1622	5.86	3.10	0.53	1701	5.43	2.88	0.53	1797
22	18	5.98	4.12	0.69	1558	5.49	3.79	0.69	1654	5.06	3.49	0.69	1717
22	20	6.28	3.58	0.57	1622	5.86	3.34	0.57	1701	5.43	3.09	0.57	1797
22	22	6.65	2.99	0.45	1685	6.22	2.80	0.45	1781	5.80	2.61	0.45	1844
23	18	5.98	4.36	0.73	1558	5.49	4.01	0.73	1654	5.06	3.70	0.73	1717
23	20	6.28	3.83	0.61	1622	5.86	3.57	0.61	1701	5.43	3.31	0.61	1797
23	22	6.65	3.26	0.49	1685	6.22	3.05	0.49	1781	5.80	2.84	0.49	1844
24	18	5.98	4.60	0.77	1558	5.49	4.23	0.77	1654	5.06	3.90	0.77	1717
24	20	6.28	4.08	0.65	1622	5.86	3.81	0.65	1701	5.43	3.53	0.65	1797
24	22	6.65	3.52	0.53	1685	6.22	3.30	0.53	1781	5.80	3.07	0.53	1844
24	24	7.02	2.88	0.41	1749	6.59	2.70	0.41	1829	6.22	2.55	0.41	1908
25	18	5.98	4.84	0.81	1558	5.49	4.45	0.81	1654	5.06	4.10	0.81	1717
25	20	6.28	4.34	0.69	1622	5.86	4.04	0.69	1701	5.43	3.75	0.69	1797
25	22	6.65	3.79	0.57	1685	6.22	3.55	0.57	1781	5.80	3.30	0.57	1844
25	24	7.02	3.16	0.45	1749	6.59	2.96	0.45	1829	6.22	2.80	0.45	1908
26	18	5.98	5.08	0.85	1558	5.49	4.67	0.85	1654	5.06	4.30	0.85	1717
26	20	6.28	4.59	0.73	1622	5.86	4.27	0.73	1701	5.43	3.96	0.73	1797
26	22	6.65	4.06	0.61	1685	6.22	3.80	0.61	1781	5.80	3.53	0.61	1844
26	24	7.02	3.44	0.49	1749	6.59	3.23	0.49	1829	6.22	3.05	0.49	1908
26	26	7.38	2.73	0.37	1813	6.95	2.57	0.37	1892	6.53	2.41	0.37	1972
27	18	5.98	5.32	0.89	1558	5.49	4.89	0.89	1654	5.06	4.51	0.89	1717
27	20	6.28	4.84	0.77	1622	5.86	4.51	0.77	1701	5.43	4.18	0.77	1797
27	22	6.65	4.32	0.65	1685	6.22	4.04	0.65	1781	5.80	3.77	0.65	1844
27	24	7.02	3.72	0.53	1749	6.59	3.49	0.53	1829	6.22	3.30	0.53	1908
27	26	7.38	3.03	0.41	1813	6.95	2.85	0.41	1892	6.53	2.68	0.41	1972
28	18	5.98	5.56	0.93	1558	5.49	5.11	0.93	1654	5.06	4.71	0.93	1717
28	20	6.28	5.09	0.81	1622	5.86	4.74	0.81	1701	5.43	4.40	0.81	1797
28	22	6.65	4.59	0.69	1685	6.22	4.29	0.69	1781	5.80	4.00	0.69	1844
28	24	7.02	4.00	0.57	1749	6.59	3.76	0.57	1829	6.22	3.55	0.57	1908
28	26	7.38	3.32	0.45	1813	6.95	3.13	0.45	1892	6.53	2.94	0.45	1972
29	18	5.98	5.80	0.97	1558	5.49	5.33	0.97	1654	5.06	4.91	0.97	1717
29	20	6.28	5.34	0.85	1622	5.86	4.98	0.85	1701	5.43	4.61	0.85	1797
29	22	6.65	4.85	0.73	1685	6.22	4.54	0.73	1781	5.80	4.23	0.73	1844
29	24	7.02	4.28	0.61	1749	6.59	4.02	0.61	1829	6.22	3.80	0.61	1908
29	26	7.38	3.62	0.49	1813	6.95	3.41	0.49	1892	6.53	3.20	0.49	1972
30	18	5.98	5.98	1.00	1558	5.49	5.49	1.00	1654	5.06	5.06	1.00	1717
30	20	6.28	5.59	0.89	1622	5.86	5.21	0.89	1701	5.43	4.83	0.89	1797
30	22	6.65	5.12	0.77	1685	6.22	4.79	0.77	1781	5.80	4.46	0.77	1844
30	24	7.02	4.56	0.65	1749	6.59	4.28	0.65	1829	6.22	4.04	0.65	1908
30	26	7.38	3.91	0.53	1813	6.95	3.69	0.53	1892	6.53	3.46	0.53	1972
31	18	5.98	5.98	1.00	1558	5.49	5.49	1.00	1654	5.06	5.06	1.00	1717
31	20	6.28	5.84	0.93	1622	5.86	5.45	0.93	1701	5.43	5.05	0.93	1797
31	22	6.65	5.39	0.81	1685	6.22	5.04	0.81	1781	5.80	4.69	0.81	1844
31	24	7.02	4.84	0.69	1749	6.59	4.55	0.69	1829	6.22	4.29	0.69	1908
31	26	7.38	4.21	0.57	1813	6.95	3.96	0.57	1892	6.53	3.72	0.57	1972
32	18	5.98	5.98	1.00	1558	5.49	5.49	1.00	1654	5.06	5.06	1.00	1717
32	20	6.28	6.09	0.97	1622	5.86	5.68	0.97	1701	5.43	5.27	0.97	1797
32	22	6.65	5.65	0.85	1685	6.22	5.29	0.85	1781	5.80	4.93	0.85	1844
32	24	7.02	5.12	0.73	1749	6.59	4.81	0.73	1829	6.22	4.54	0.73	1908
32	26	7.38	4.50	0.61	1813	6.95	4.24	0.61	1892	6.53	3.98	0.61	1972

NOTE Q : Total capacity (kW) SHF : Sensible heat factor DB : Dry-bulb temperature
SHC : Sensible heat capacity (kW) INPUT : Total power input (W) WB : Wet-bulb temperature

PERFORMANCE DATA COOL operation at Rated frequency

MUZ-AP71VG

CAPACITY: 7.1 kW SHF: 0.77 INPUT: 2010 W

INDOOR DB (°C)	INDOOR WB (°C)	OUTDOOR DB (°C)															
		21				25				27				30			
		Q	SHC	SHF	INPUT	Q	SHC	SHF	INPUT	Q	SHC	SHF	INPUT	Q	SHC	SHF	INPUT
21	18	8.34	4.92	0.59	1608	7.99	4.71	0.59	1688	7.67	4.52	0.59	1769	7.38	4.36	0.59	1849
21	20	8.70	4.09	0.47	1688	8.34	3.92	0.47	1789	8.09	3.80	0.47	1829	7.81	3.67	0.47	1910
22	18	8.34	5.26	0.63	1608	7.99	5.03	0.63	1688	7.67	4.83	0.63	1769	7.38	4.65	0.63	1849
22	20	8.70	4.44	0.51	1688	8.34	4.25	0.51	1789	8.09	4.13	0.51	1829	7.81	3.98	0.51	1910
22	22	9.05	3.53	0.39	1749	8.73	3.41	0.39	1859	8.52	3.32	0.39	1910	8.17	3.18	0.39	1990
23	18	8.34	5.59	0.67	1608	7.99	5.35	0.67	1688	7.67	5.14	0.67	1769	7.38	4.95	0.67	1849
23	20	8.70	4.78	0.55	1688	8.34	4.59	0.55	1789	8.09	4.45	0.55	1829	7.81	4.30	0.55	1910
23	22	9.05	3.89	0.43	1749	8.73	3.76	0.43	1859	8.52	3.66	0.43	1910	8.17	3.51	0.43	1990
24	18	8.34	5.92	0.71	1608	7.99	5.67	0.71	1688	7.67	5.44	0.71	1769	7.38	5.24	0.71	1849
24	20	8.70	5.13	0.59	1688	8.34	4.92	0.59	1789	8.09	4.78	0.59	1829	7.81	4.61	0.59	1910
24	22	9.05	4.25	0.47	1749	8.73	4.10	0.47	1859	8.52	4.00	0.47	1910	8.17	3.84	0.47	1990
24	24	9.51	3.33	0.35	1829	9.16	3.21	0.35	1930	8.95	3.13	0.35	1990	8.66	3.03	0.35	2090
25	18	8.34	6.26	0.75	1608	7.99	5.99	0.75	1688	7.67	5.75	0.75	1769	7.38	5.54	0.75	1849
25	20	8.70	5.48	0.63	1688	8.34	5.26	0.63	1789	8.09	5.10	0.63	1829	7.81	4.92	0.63	1910
25	22	9.05	4.62	0.51	1749	8.73	4.45	0.51	1859	8.52	4.35	0.51	1910	8.17	4.16	0.51	1990
25	24	9.51	3.71	0.39	1829	9.16	3.57	0.39	1930	8.95	3.49	0.39	1990	8.66	3.38	0.39	2090
26	18	8.34	6.59	0.79	1608	7.99	6.31	0.79	1688	7.67	6.06	0.79	1769	7.38	5.83	0.79	1849
26	20	8.70	5.83	0.67	1688	8.34	5.59	0.67	1789	8.09	5.42	0.67	1829	7.81	5.23	0.67	1910
26	22	9.05	4.98	0.55	1749	8.73	4.80	0.55	1859	8.52	4.69	0.55	1910	8.17	4.49	0.55	1990
26	24	9.51	4.09	0.43	1829	9.16	3.94	0.43	1930	8.95	3.85	0.43	1990	8.66	3.72	0.43	2090
26	26	9.80	3.04	0.31	1930	9.51	2.95	0.31	2030	9.37	2.91	0.31	2090	9.09	2.82	0.31	2151
27	18	8.34	6.92	0.83	1608	7.99	6.63	0.83	1688	7.67	6.36	0.83	1769	7.38	6.13	0.83	1849
27	20	8.70	6.18	0.71	1688	8.34	5.92	0.71	1789	8.09	5.75	0.71	1829	7.81	5.55	0.71	1910
27	22	9.05	5.34	0.59	1749	8.73	5.15	0.59	1859	8.52	5.03	0.59	1910	8.17	4.82	0.59	1990
27	24	9.51	4.47	0.47	1829	9.16	4.30	0.47	1930	8.95	4.20	0.47	1990	8.66	4.07	0.47	2090
27	26	9.80	3.43	0.35	1930	9.51	3.33	0.35	2030	9.37	3.28	0.35	2090	9.09	3.18	0.35	2151
28	18	8.34	7.26	0.87	1608	7.99	6.95	0.87	1688	7.67	6.67	0.87	1769	7.38	6.42	0.87	1849
28	20	8.70	6.52	0.75	1688	8.34	6.26	0.75	1789	8.09	6.07	0.75	1829	7.81	5.86	0.75	1910
28	22	9.05	5.70	0.63	1749	8.73	5.50	0.63	1859	8.52	5.37	0.63	1910	8.17	5.14	0.63	1990
28	24	9.51	4.85	0.51	1829	9.16	4.67	0.51	1930	8.95	4.56	0.51	1990	8.66	4.42	0.51	2090
28	26	9.80	3.82	0.39	1930	9.51	3.71	0.39	2030	9.37	3.66	0.39	2090	9.09	3.54	0.39	2151
29	18	8.34	7.59	0.91	1608	7.99	7.27	0.91	1688	7.67	6.98	0.91	1769	7.38	6.72	0.91	1849
29	20	8.70	6.87	0.79	1688	8.34	6.59	0.79	1789	8.09	6.39	0.79	1829	7.81	6.17	0.79	1910
29	22	9.05	6.07	0.67	1749	8.73	5.85	0.67	1859	8.52	5.71	0.67	1910	8.17	5.47	0.67	1990
29	24	9.51	5.23	0.55	1829	9.16	5.04	0.55	1930	8.95	4.92	0.55	1990	8.66	4.76	0.55	2090
29	26	9.80	4.21	0.43	1930	9.51	4.09	0.43	2030	9.37	4.03	0.43	2090	9.09	3.91	0.43	2151
30	18	8.34	7.93	0.95	1608	7.99	7.59	0.95	1688	7.67	7.28	0.95	1769	7.38	7.01	0.95	1849
30	20	8.70	7.22	0.83	1688	8.34	6.92	0.83	1789	8.09	6.72	0.83	1829	7.81	6.48	0.83	1910
30	22	9.05	6.43	0.71	1749	8.73	6.20	0.71	1859	8.52	6.05	0.71	1910	8.17	5.80	0.71	1990
30	24	9.51	5.61	0.59	1829	9.16	5.40	0.59	1930	8.95	5.28	0.59	1990	8.66	5.11	0.59	2090
30	26	9.80	4.61	0.47	1930	9.51	4.47	0.47	2030	9.37	4.40	0.47	2090	9.09	4.27	0.47	2151
31	18	8.34	8.26	0.99	1608	7.99	7.91	0.99	1688	7.67	7.59	0.99	1769	7.38	7.31	0.99	1849
31	20	8.70	7.57	0.87	1688	8.34	7.26	0.87	1789	8.09	7.04	0.87	1829	7.81	6.79	0.87	1910
31	22	9.05	6.79	0.75	1749	8.73	6.55	0.75	1859	8.52	6.39	0.75	1910	8.17	6.12	0.75	1990
31	24	9.51	5.99	0.63	1829	9.16	5.77	0.63	1930	8.95	5.64	0.63	1990	8.66	5.46	0.63	2090
31	26	9.80	5.00	0.51	1930	9.51	4.85	0.51	2030	9.37	4.78	0.51	2090	9.09	4.63	0.51	2151
32	18	8.34	8.34	1.00	1608	7.99	7.99	1.00	1688	7.67	7.67	1.00	1769	7.38	7.38	1.00	1849
32	20	8.70	7.91	0.91	1688	8.34	7.59	0.91	1789	8.09	7.37	0.91	1829	7.81	7.11	0.91	1910
32	22	9.05	7.15	0.79	1749	8.73	6.90	0.79	1859	8.52	6.73	0.79	1910	8.17	6.45	0.79	1990
32	24	9.51	6.37	0.67	1829	9.16	6.14	0.67	1930	8.95	5.99	0.67	1990	8.66	5.80	0.67	2090
32	26	9.80	5.39	0.55	1930	9.51	5.23	0.55	2030	9.37	5.15	0.55	2090	9.09	5.00	0.55	2151

NOTE Q : Total capacity (kW) SHF : Sensible heat factor DB : Dry-bulb temperature
SHC : Sensible heat capacity (kW) INPUT : Total power input (W) WB : Wet-bulb temperature

PERFORMANCE DATA COOL operation at Rated frequency

MUZ-AP71VG

CAPACITY: 7.1 kW SHF: 0.77 INPUT: 2010 W

INDOOR DB (°C)	INDOOR WB (°C)	OUTDOOR DB (°C)											
		35				40				46			
		Q	SHC	SHF	INPUT	Q	SHC	SHF	INPUT	Q	SHC	SHF	INPUT
21	18	6.96	4.11	0.59	1970	6.39	3.77	0.59	2090	5.89	3.48	0.59	2171
21	20	7.31	3.44	0.47	2050	6.82	3.20	0.47	2151	6.32	2.97	0.47	2271
22	18	6.96	4.38	0.63	1970	6.39	4.03	0.63	2090	5.89	3.71	0.63	2171
22	20	7.31	3.73	0.51	2050	6.82	3.48	0.51	2151	6.32	3.22	0.51	2271
22	22	7.74	3.02	0.39	2131	7.24	2.82	0.39	2251	6.75	2.63	0.39	2332
23	18	6.96	4.66	0.67	1970	6.39	4.28	0.67	2090	5.89	3.95	0.67	2171
23	20	7.31	4.02	0.55	2050	6.82	3.75	0.55	2151	6.32	3.48	0.55	2271
23	22	7.74	3.33	0.43	2131	7.24	3.11	0.43	2251	6.75	2.90	0.43	2332
24	18	6.96	4.94	0.71	1970	6.39	4.54	0.71	2090	5.89	4.18	0.71	2171
24	20	7.31	4.31	0.59	2050	6.82	4.02	0.59	2151	6.32	3.73	0.59	2271
24	22	7.74	3.64	0.47	2131	7.24	3.40	0.47	2251	6.75	3.17	0.47	2332
24	24	8.17	2.86	0.35	2211	7.67	2.68	0.35	2312	7.24	2.53	0.35	2412
25	18	6.96	5.22	0.75	1970	6.39	4.79	0.75	2090	5.89	4.42	0.75	2171
25	20	7.31	4.61	0.63	2050	6.82	4.29	0.63	2151	6.32	3.98	0.63	2271
25	22	7.74	3.95	0.51	2131	7.24	3.69	0.51	2251	6.75	3.44	0.51	2332
25	24	8.17	3.18	0.39	2211	7.67	2.99	0.39	2312	7.24	2.82	0.39	2412
26	18	6.96	5.50	0.79	1970	6.39	5.05	0.79	2090	5.89	4.66	0.79	2171
26	20	7.31	4.90	0.67	2050	6.82	4.57	0.67	2151	6.32	4.23	0.67	2271
26	22	7.74	4.26	0.55	2131	7.24	3.98	0.55	2251	6.75	3.71	0.55	2332
26	24	8.17	3.51	0.43	2211	7.67	3.30	0.43	2312	7.24	3.11	0.43	2412
26	26	8.59	2.66	0.31	2291	8.09	2.51	0.31	2392	7.60	2.36	0.31	2492
27	18	6.96	5.78	0.83	1970	6.39	5.30	0.83	2090	5.89	4.89	0.83	2171
27	20	7.31	5.19	0.71	2050	6.82	4.84	0.71	2151	6.32	4.49	0.71	2271
27	22	7.74	4.57	0.59	2131	7.24	4.27	0.59	2251	6.75	3.98	0.59	2332
27	24	8.17	3.84	0.47	2211	7.67	3.60	0.47	2312	7.24	3.40	0.47	2412
27	26	8.59	3.01	0.35	2291	8.09	2.83	0.35	2392	7.60	2.66	0.35	2492
28	18	6.96	6.05	0.87	1970	6.39	5.56	0.87	2090	5.89	5.13	0.87	2171
28	20	7.31	5.48	0.75	2050	6.82	5.11	0.75	2151	6.32	4.74	0.75	2271
28	22	7.74	4.88	0.63	2131	7.24	4.56	0.63	2251	6.75	4.25	0.63	2332
28	24	8.17	4.16	0.51	2211	7.67	3.91	0.51	2312	7.24	3.69	0.51	2412
28	26	8.59	3.35	0.39	2291	8.09	3.16	0.39	2392	7.60	2.96	0.39	2492
29	18	6.96	6.33	0.91	1970	6.39	5.81	0.91	2090	5.89	5.36	0.91	2171
29	20	7.31	5.78	0.79	2050	6.82	5.38	0.79	2151	6.32	4.99	0.79	2271
29	22	7.74	5.19	0.67	2131	7.24	4.85	0.67	2251	6.75	4.52	0.67	2332
29	24	8.17	4.49	0.55	2211	7.67	4.22	0.55	2312	7.24	3.98	0.55	2412
29	26	8.59	3.69	0.43	2291	8.09	3.48	0.43	2392	7.60	3.27	0.43	2492
30	18	6.96	6.61	0.95	1970	6.39	6.07	0.95	2090	5.89	5.60	0.95	2171
30	20	7.31	6.07	0.83	2050	6.82	5.66	0.83	2151	6.32	5.24	0.83	2271
30	22	7.74	5.49	0.71	2131	7.24	5.14	0.71	2251	6.75	4.79	0.71	2332
30	24	8.17	4.82	0.59	2211	7.67	4.52	0.59	2312	7.24	4.27	0.59	2412
30	26	8.59	4.04	0.47	2291	8.09	3.80	0.47	2392	7.60	3.57	0.47	2492
31	18	6.96	6.89	0.99	1970	6.39	6.33	0.99	2090	5.89	5.83	0.99	2171
31	20	7.31	6.36	0.87	2050	6.82	5.93	0.87	2151	6.32	5.50	0.87	2271
31	22	7.74	5.80	0.75	2131	7.24	5.43	0.75	2251	6.75	5.06	0.75	2332
31	24	8.17	5.14	0.63	2211	7.67	4.83	0.63	2312	7.24	4.56	0.63	2412
31	26	8.59	4.38	0.51	2291	8.09	4.13	0.51	2392	7.60	3.87	0.51	2492
32	18	6.96	6.96	1.00	1970	6.39	6.39	1.00	2090	5.89	5.89	1.00	2171
32	20	7.31	6.65	0.91	2050	6.82	6.20	0.91	2151	6.32	5.75	0.91	2271
32	22	7.74	6.11	0.79	2131	7.24	5.72	0.79	2251	6.75	5.33	0.79	2332
32	24	8.17	5.47	0.67	2211	7.67	5.14	0.67	2312	7.24	4.85	0.67	2412
32	26	8.59	4.73	0.55	2291	8.09	4.45	0.55	2392	7.60	4.18	0.55	2492

NOTE Q : Total capacity (kW) SHF : Sensible heat factor DB : Dry-bulb temperature
SHC : Sensible heat capacity (kW) INPUT : Total power input (W) WB : Wet-bulb temperature

PERFORMANCE DATA HEAT operation at Rated frequency

MUZ-AP25VG

CAPACITY: 3.2 kW INPUT: 780 W

INDOOR DB (°C)	OUTDOOR WB (°C)															
	-15		-10		-5		0		5		10		15		20	
	Q	INPUT	Q	INPUT	Q	INPUT	Q	INPUT	Q	INPUT	Q	INPUT	Q	INPUT	Q	INPUT
15	1.60	406	2.02	507	2.43	608	2.85	686	3.26	741	3.68	788	4.06	811	4.48	827
21	1.50	429	1.92	546	2.30	647	2.72	718	3.10	772	3.52	811	3.90	835	4.30	866
26	1.31	468	1.73	585	2.14	686	2.53	757	2.94	811	3.36	850	3.74	874	4.16	897

MUZ-AP25VGH

CAPACITY: 3.2 kW INPUT: 780 W

INDOOR DB (°C)	OUTDOOR WB (°C)																	
	-20		-15		-10		-5		0		5		10		15		20	
	Q	INPUT	Q	INPUT	Q	INPUT	Q	INPUT	Q	INPUT	Q	INPUT	Q	INPUT	Q	INPUT	Q	INPUT
15	1.22	312	1.60	406	2.02	507	2.43	608	2.85	686	3.26	741	3.68	788	4.06	811	4.48	827
21	1.12	328	1.50	429	1.92	546	2.30	647	2.72	718	3.10	772	3.52	811	3.90	835	4.30	866
26	0.90	351	1.31	468	1.73	585	2.14	686	2.53	757	2.94	811	3.36	850	3.74	874	4.16	897

MUZ-AP35VG

CAPACITY: 4.0 kW INPUT: 1030 W

INDOOR DB (°C)	OUTDOOR WB (°C)															
	-15		-10		-5		0		5		10		15		20	
	Q	INPUT	Q	INPUT	Q	INPUT	Q	INPUT	Q	INPUT	Q	INPUT	Q	INPUT	Q	INPUT
15	2.00	536	2.52	670	3.04	803	3.56	906	4.08	979	4.60	1040	5.08	1071	5.60	1092
21	1.88	567	2.40	721	2.88	855	3.40	948	3.88	1020	4.40	1071	4.88	1102	5.38	1143
26	1.64	618	2.16	773	2.68	906	3.16	999	3.68	1071	4.20	1123	4.68	1154	5.20	1185

MUZ-AP35VGH

CAPACITY: 4.0 kW INPUT: 1030 W

INDOOR DB (°C)	OUTDOOR WB (°C)																	
	-20		-15		-10		-5		0		5		10		15		20	
	Q	INPUT	Q	INPUT	Q	INPUT	Q	INPUT	Q	INPUT	Q	INPUT	Q	INPUT	Q	INPUT	Q	INPUT
15	1.52	412	2.00	536	2.52	670	3.04	803	3.56	906	4.08	979	4.60	1040	5.08	1071	5.60	1092
21	1.40	433	1.88	567	2.40	721	2.88	855	3.40	948	3.88	1020	4.40	1071	4.88	1102	5.38	1143
26	1.12	464	1.64	618	2.16	773	2.68	906	3.16	999	3.68	1071	4.20	1123	4.68	1154	5.20	1185

MUZ-AP42VG

CAPACITY: 5.4 kW INPUT: 1490 W

INDOOR DB (°C)	OUTDOOR WB (°C)															
	-15		-10		-5		0		5		10		15		20	
	Q	INPUT	Q	INPUT	Q	INPUT	Q	INPUT	Q	INPUT	Q	INPUT	Q	INPUT	Q	INPUT
15	2.70	775	3.40	969	4.10	1162	4.81	1311	5.51	1416	6.21	1505	6.86	1550	7.56	1579
21	2.54	820	3.24	1043	3.89	1237	4.59	1371	5.24	1475	5.94	1550	6.59	1594	7.26	1654
26	2.21	894	2.92	1118	3.62	1311	4.27	1445	4.97	1550	5.67	1624	6.32	1669	7.02	1714

MUZ-AP42VGH

CAPACITY: 5.4 kW INPUT: 1490 W

INDOOR DB (°C)	OUTDOOR WB (°C)																	
	-20		-15		-10		-5		0		5		10		15		20	
	Q	INPUT	Q	INPUT	Q	INPUT	Q	INPUT	Q	INPUT	Q	INPUT	Q	INPUT	Q	INPUT	Q	INPUT
15	2.05	596	2.70	775	3.40	969	4.10	1162	4.81	1311	5.51	1416	6.21	1505	6.86	1550	7.56	1579
21	1.89	626	2.54	820	3.24	1043	3.89	1237	4.59	1371	5.24	1475	5.94	1550	6.59	1594	7.26	1654
26	1.51	671	2.21	894	2.92	1118	3.62	1311	4.27	1445	4.97	1550	5.67	1624	6.32	1669	7.02	1714

NOTE: Q: Total capacity (kW) INPUT : Total power input (W) DB: Dry-bulb temperature WB: Wet-bulb temperature

PERFORMANCE DATA HEAT operation at Rated frequency

MUZ-AP50VG

CAPACITY: 5.8 kW INPUT: 1600 W

INDOOR DB (°C)	OUTDOOR WB (°C)															
	-15		-10		-5		0		5		10		15		20	
	Q	INPUT	Q	INPUT	Q	INPUT	Q	INPUT	Q	INPUT	Q	INPUT	Q	INPUT	Q	INPUT
15	2.90	832	3.65	1040	4.41	1248	5.16	1408	5.92	1520	6.67	1616	7.37	1664	8.12	1696
21	2.73	880	3.48	1120	4.18	1328	4.93	1472	5.63	1584	6.38	1664	7.08	1712	7.80	1776
26	2.38	960	3.13	1200	3.89	1408	4.58	1552	5.34	1664	6.09	1744	6.79	1792	7.54	1840

MUZ-AP50VGH

CAPACITY: 5.8 kW INPUT: 1600 W

INDOOR DB (°C)	OUTDOOR WB (°C)																	
	-20		-15		-10		-5		0		5		10		15		20	
	Q	INPUT	Q	INPUT	Q	INPUT	Q	INPUT	Q	INPUT	Q	INPUT	Q	INPUT	Q	INPUT	Q	INPUT
15	2.20	640	2.90	832	3.65	1040	4.41	1248	5.16	1408	5.92	1520	6.67	1616	7.37	1664	8.12	1696
21	2.03	672	2.73	880	3.48	1120	4.18	1328	4.93	1472	5.63	1584	6.38	1664	7.08	1712	7.80	1776
26	1.62	720	2.38	960	3.13	1200	3.89	1408	4.58	1552	5.34	1664	6.09	1744	6.79	1792	7.54	1840

MUZ-AP60VG

CAPACITY: 6.8 kW INPUT: 1670 W

INDOOR DB (°C)	OUTDOOR WB (°C)															
	-15		-10		-5		0		5		10		15		20	
	Q	INPUT	Q	INPUT	Q	INPUT	Q	INPUT	Q	INPUT	Q	INPUT	Q	INPUT	Q	INPUT
15	3.40	868	4.28	1086	5.17	1303	6.05	1470	6.94	1587	7.82	1687	8.64	1737	9.52	1770
21	3.20	919	4.08	1169	4.90	1386	5.78	1536	6.60	1653	7.48	1737	8.30	1787	9.15	1854
26	2.79	1002	3.67	1253	4.56	1470	5.37	1620	6.26	1737	7.14	1820	7.96	1870	8.84	1921

MUZ-AP71VG

CAPACITY: 8.1 kW INPUT: 2120 W

INDOOR DB (°C)	OUTDOOR WB (°C)															
	-15		-10		-5		0		5		10		15		20	
	Q	INPUT	Q	INPUT	Q	INPUT	Q	INPUT	Q	INPUT	Q	INPUT	Q	INPUT	Q	INPUT
15	4.05	1102	5.10	1378	6.16	1654	7.21	1866	8.26	2014	9.32	2141	10.29	2205	11.34	2247
21	3.81	1166	4.86	1484	5.83	1760	6.89	1950	7.86	2099	8.91	2205	9.88	2268	10.89	2353
26	3.32	1272	4.37	1590	5.43	1866	6.40	2056	7.45	2205	8.51	2311	9.48	2374	10.53	2438

NOTE: Q: Total capacity (kW) INPUT : Total power input (W) DB: Dry-bulb temperature WB: Wet-bulb temperature

10 ACTUATOR CONTROL

MUZ-AP25VG MUZ-AP35VG MUZ-AP42VG MUZ-AP50VG MUZ-AP60VG MUZ-AP71VG
MUZ-AP25VGH MUZ-AP35VGH MUZ-AP42VGH MUZ-AP50VGH

10-1. OUTDOOR FAN MOTOR CONTROL

The fan motor turns ON/OFF, interlocking with the compressor.
[ON] The fan motor turns ON 5 seconds before the compressor starts up.
[OFF] The fan motor turns OFF 15 seconds after the compressor has stopped running.

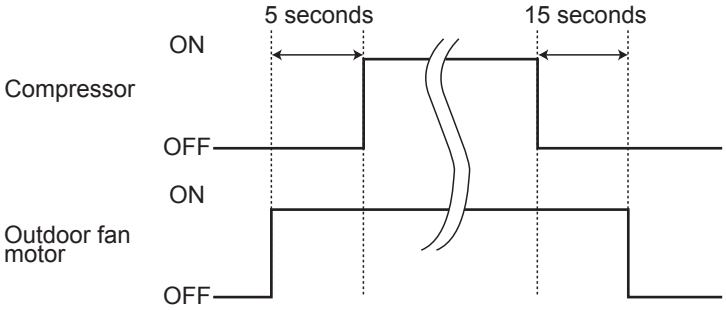

10-2. R.V. COIL CONTROL

Heating · · · · · · · · · · · · · · · · · · ON
Cooling · · · · · · · · · · · · · · · · · · OFF
Dry · OFF
NOTE: The 4-way valve reverses for 5 seconds right before startup of the compressor.

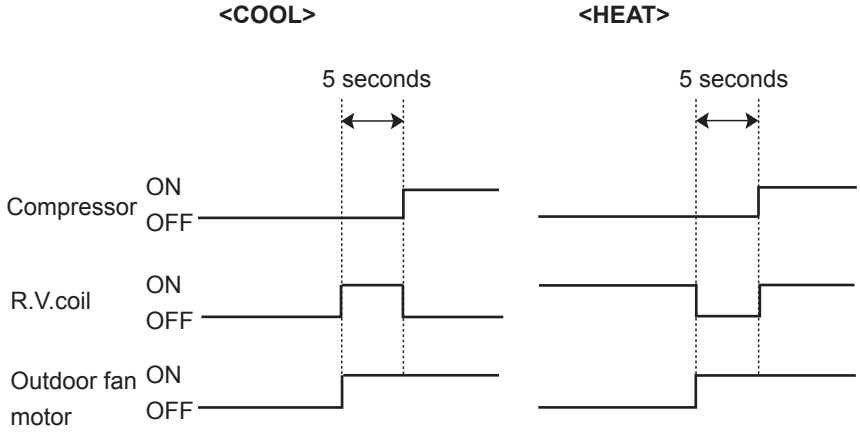

10-3. RELATION BETWEEN MAIN SENSOR AND ACTUATOR

Sensor	Purpose	Actuator					
		Compressor	LEV	Outdoor fan motor	R.V. coil	Indoor fan motor	Defrost heater
Discharge temperature thermistor	Protection	○	○				
Indoor coil temperature thermistor	Cooling: Coil frost prevention	○					
	Heating: High pressure protection	○	○				
Defrost thermistor	Heating: Defrosting	○	○	○	○	○	
Fin temperature thermistor	Protection	○		○			
Ambient temperature thermistor	Cooling: Low ambient temperature operation	○	○	○			
	Heating: Defrosting (Heater)						○
Outdoor heat exchanger temperature thermistor	Cooling: Low ambient temperature operation	○	○	○			
	Cooling: High pressure protection	○	○	○			

11 SERVICE FUNCTIONS

MUZ-AP25VG MUZ-AP35VG MUZ-AP42VG MUZ-AP50VG MUZ-AP60VG MUZ-AP71VG
MUZ-AP25VGH MUZ-AP35VGH MUZ-AP42VGH MUZ-AP50VGH

11-1. CHANGE IN DEFROST SETTING

Changing defrost finish temperature

<JS> To change the defrost finish temperature, cut/solder the JS wire of the outdoor inverter P.C. board. (Refer to 12-6-1.)

Jumper wire		Defrost finish temperature (°C)	
		MUZ-AP25/35/42/50/60VG MUZ-AP25/35/42/50VG MUZ-AP25/35/42/50VGH	MUZ-AP71VG
JS	Soldered (Initial setting)	5	10
	None (Cut)	10	18

11-2. PRE-HEAT CONTROL SETTING

PRE-HEAT CONTROL

MUZ-AP25/35/42/50/60

When moisture gets into the refrigerant cycle, it may interfere the startup of the compressor at low outside temperature. The pre-heat control prevents this interference. The pre-heat control turns ON when the discharge temperature thermistor is 20°C or below. When the pre-heat control turns ON, the compressor is energized. (About 50 W)

MUZ-AP71

Prolonged low load operation, in which the thermostat is OFF for a long time, at low outside temperature (0°C or less) may cause the following troubles. To prevent those troubles, activate the pre-heat control.

1) If moisture gets into the refrigerant cycle and freezes, it may interfere the startup of the compressor.
2) If liquid refrigerant collects in the compressor, a failure in the compressor may occur.

The pre-heat control turns ON when the compressor temperature is 20°C or below. When the pre-heat control turns ON, the compressor is energized. (About 70 W)

Pre-heat control setting

<JK>

ON: To activate the pre-heat control, cut the JK wire of the inverter P.C. board.

OFF: To deactivate the pre-heat control, solder the JK wire of the inverter P.C. board.

(Refer to 12-6.1)

NOTE: When the inverter P.C. board is replaced, check the jumper wires, and cut/solder them if necessary.

12 TROUBLESHOOTING

MUZ-AP25VG MUZ-AP35VG MUZ-AP42VG MUZ-AP50VG MUZ-AP60VG MUZ-AP71VG
MUZ-AP25VGH MUZ-AP35VGH MUZ-AP42VGH MUZ-AP50VGH

12-1. CAUTIONS ON TROUBLESHOOTING

1. Before troubleshooting, check the following

1) Check the power supply voltage.
2) Check the indoor/outdoor connecting wire for miswiring.

2. Take care of the following during servicing

1) Before servicing the air conditioner, be sure to turn OFF the main unit first with the remote controller, and after confirming the horizontal vane is closed, turn OFF the breaker and/or disconnect the power plug.
2) Be sure to turn OFF the power supply before removing the front panel, the cabinet, the top panel, and the electronic control P.C. board.
3) When removing the electrical parts, be careful of the residual voltage of smoothing capacitor.
4) When removing the electronic control P.C. board, hold the edge of the board with care NOT to apply stress on the components.
5) When connecting or disconnecting the connectors, hold the connector housing. DO NOT pull the lead wires.

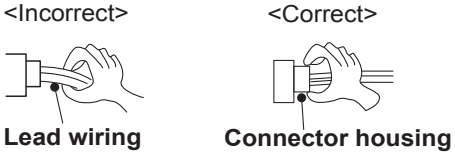

3. Troubleshooting procedure

1) Check if the OPERATION INDICATOR lamp on the indoor unit is blinking on and off to indicate an abnormality.
   To make sure, check how many times the OPERATION INDICATOR lamp is blinking on and off before starting service work.
2) Before servicing, verify that all connectors and terminals are connected properly.
3) When the electronic control P.C. board seems to be defective, check for disconnection of the copper foil pattern and burnt or discolored components.
4) Refer to 12-2 and 12-3.

12-2. FAILURE MODE RECALL FUNCTION

Outline of the function

This air conditioner can memorize the abnormal condition which has occurred once.

Even though LED indication listed on the troubleshooting check table (12-3.) disappears, the memorized failure details can be recalled.

1. Flow chart of failure mode recall function for the indoor/outdoor unit

NOTE: The indoor unit does not operate by smartphone, refer to 10-3.2."Check of Wi-Fi Interface".

MSZ-AP25/35/42/50VG
MSZ-AP25/35/42/50VGH

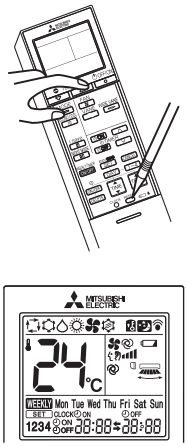

MSZ-AP60/71VG

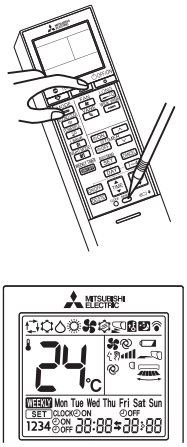

Operational procedure

The cause of abnormality cannot be found because the abnormality does not recur.

Setting up the failure mode recall function

Turn ON the power supply.
<Preparation of the remote controller>
① While pressing Operation select button and TEMP ⊕ button on the remote controller at the same time, press RESET button.
② First, release RESET button.
Hold down the other 2 buttons for another 3 seconds. Make sure that the indicators on the LCD screen shown in the right figure are all displayed. Then release the buttons.

Press OFF/ON (stop/operate) button of the remote controller (the set temperature is displayed) with the remote controller headed towards the indoor unit. *1

*1. Regardless of normal or abnormal condition, a short beep is emitted once the signal is received.

Does the upper lamp of OPERATION INDICATOR lamp on the indoor unit blink at the interval of 0.5 seconds?
Blinks: Either indoor or outdoor unit is abnormal. Beep is emitted at the same timing as the blinking of the upper lamp on the indoor unit. *2

No (OFF) → Indoor unit is normal.
But the outdoor unit might be abnormal because there are some abnormalities that cannot be recalled with this way.
Check if outdoor unit is abnormal according to the detailed outdoor unit failure mode recall function. (Refer to 12-2.2)

Yes (Blinks)

Judgment of indoor/outdoor abnormality

Before blinking, does the upper lamp on the indoor unit stay ON for 3 seconds? When it stays ON for 3 seconds (without beep):The outdoor unit is abnormal.

Yes → The outdoor unit is abnormal.
Check the blinking pattern, and identify the abnormal point by referring to the table of outdoor unit failure mode recall function. (Refer to 12-2.3)
Make sure to check at least 2 consecutive blinking cycles. *3

No → The indoor unit is abnormal.
Check the blinking pattern, and identify the abnormal point by referring to the table of indoor unit failure mode recall function. (Refer to indoor unit service manual.)
Make sure to check at least 2 consecutive blinking cycles. *2

Releasing the failure mode recall function

Release the failure mode recall function by the following procedures.
Turn OFF the power supply and turn it ON again.
Press RESET button of the remote controller.

Repair the failure parts.

Deleting the memorized abnormal condition

① After repairing the unit, recall the failure mode again according to "Setting up the failure mode recall function" mentioned above.
② Press OFF/ON (stop/operate) button of the remote controller (the set temperature is displayed) with the remote controller headed towards the indoor unit.
③ Press the emergency operation switch so that the memorized abnormal condition is deleted.
④ Release the failure mode recall function according to "Releasing the failure mode recall function" mentioned above.

NOTE: 1. Make sure to release the failure mode recall function after it is set up, otherwise the unit cannot operate properly.
2. If the abnormal condition is not deleted from the memory, the last abnormal condition is kept memorized.

*2. Blinking pattern when the indoor unit is abnormal:

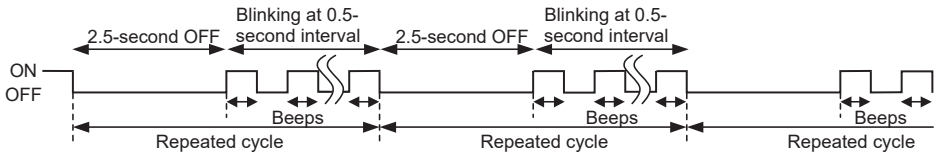

*3.Blinking pattern when the outdoor unit is abnormal:

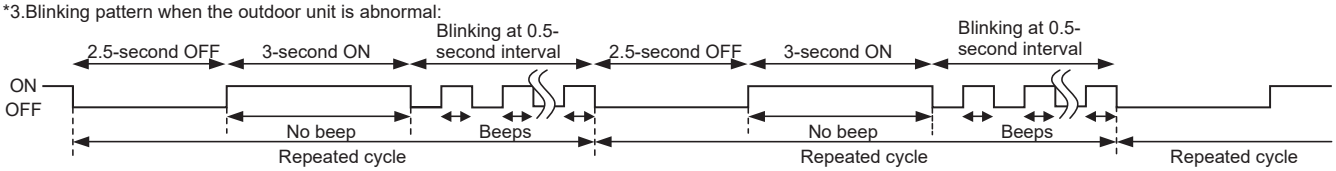

2. Flow chart of the detailed outdoor unit failure mode recall function

Operational procedure

The outdoor unit might be abnormal.
Check if outdoor unit is abnormal according to the following procedures.

↓

Make sure that the remote controller is set to the failure mode recall function.

↓

With the remote controller headed towards the indoor unit, press TEMP ⊕ button to adjust the set temperature to 25°C. *1

*1. Regardless of normal or abnormal condition, 2 short beeps are emitted as the signal is received.

NOTE: It takes up to 1 minute to indicate the outdoor unit abnormality.
Even if the upper lamp on the indoor unit is not lit, keep checking at least 1 minute or longer.

↓

Does the upper lamp of OPERATION INDICATOR lamp on the indoor unit blink at the interval of 0.5 seconds?
Blinks: The outdoor unit is abnormal. Beep is emitted at the same timing as the blinking of the upper lamp on the indoor unit. *2

No (OFF) → The outdoor unit is normal. → Release the failure mode recall function according to the left mentioned procedure.

Yes (Blinks) ↓

The outdoor unit is abnormal.
Check the blinking pattern, and identify the abnormal point by referring to the table of outdoor unit failure mode recall function (12-2.3.).
Make sure to check at least 2 consecutive blinking cycles. *2

↓

Releasing the failure mode recall function

Release the failure mode recall function by the following procedures.
Turn OFF the power supply and turn it ON again.
Press RESET button of the remote controller.

↓

Repair the failure parts.

↓

Deleting the memorized abnormal condition

① After repairing the unit, recall the failure mode again according to "Setting up the failure mode recall function" (12-2.1.).
② Press OFF/ON (stop/operate) button of the remote controller (the set temperature is displayed) with the remote controller headed towards the indoor unit.
③ Press the emergency operation switch so that the memorized abnormal condition is deleted. *3
④ Release the failure mode recall function according to "Releasing the failure mode recall function" mentioned above.

*3 The information regarding whether the connected outdoor unit is a low-standby-power model or a non-low-standby-power model will also be initialized.
(Default= compatible with a low-standby-power model)

NOTE: 1. Make sure to release the failure mode recall function after it is set up, otherwise the unit cannot operate properly.
2. If the abnormal condition is not deleted from the memory, the last abnormal condition is kept memorized.

*2.Blinking pattern when outdoor unit is abnormal:

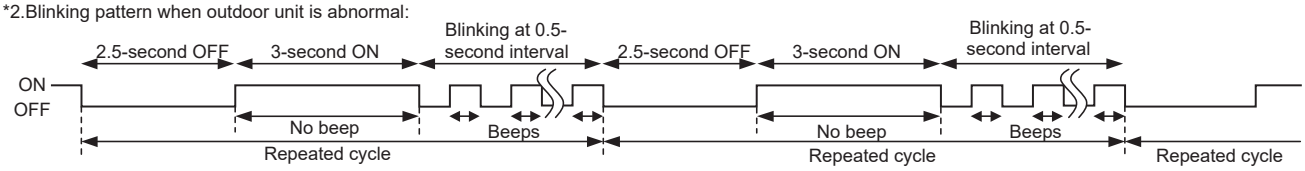

3. Table of outdoor unit failure mode recall function

NOTE: Blinking patterns of this mode differ from the ones of TROUBLESHOOTING CHECK TABLE (12-3.).

Upper lamp (Indoor unit)	Abnormal point (Failure mode/protection)	LED indication (Outdoor P.C. board)	Condition	Remedy	Indoor/outdoor unit failure mode recall function	Outdoor unit failure mode recall function
OFF	None (Normal)	—	—	—	—	—
1-time blink 2.5 seconds OFF	Indoor/outdoor communication, receiving error	—	Any signals from the inverter P.C. board cannot be received normally for 3 minutes.	•Refer to 12-5. Ⓜ How to check miswiring and serial signal error.	○	○
	Indoor/outdoor communication, receiving error	—	Although the inverter P.C. board sends signal "0", signal "1" has been received 30 consecutive times.	•Refer to 12-5. Ⓜ How to check miswiring and serial signal error.		
2-time blink 2.5 seconds OFF	Outdoor power system	—	Overcurrent protection cut-out operates 3 consecutive times within 1 minute after the compressor gets started.	•Reconnect connectors. •Refer to 12-5. Ⓐ"How to check inverter/ compressor". •Check stop valve.	○	○
3-time blink 2.5 seconds OFF	Discharge temperature thermistor	1-time blink every 2.5 seconds	Thermistor shorts or opens during compressor running.	•Refer to 12-5.Ⓖ "Check of outdoor thermistors". Defective outdoor thermistors can be identified by checking the blinking pattern of LED.	○	○
	Defrost thermistor					
	Fin temperature thermistor	3-time blink 2.5 seconds OFF				
	Ambient temperature thermistor	2-time blink 2.5 seconds OFF				
	Outdoor heat exchanger temperature thermistor	—				
	P.C. board temperature thermistor	4-time blink 2.5 seconds OFF		•Replace the inverter P.C. board.		
4-time blink 2.5 seconds OFF	Overcurrent	11-time blink 2.5 seconds OFF	Large current flows into power module (IC700).	•Reconnect compressor connector. •Refer to 12-5.Ⓐ"How to check inverter/ compressor". •Check stop valve.	—	○
	Compressor synchronous abnormality (Compressor startup failure protection)	12-time blink 2.5 seconds OFF	Waveform of compressor current is distorted.	•Reconnect compressor connector. •Refer to 12-5.Ⓐ"How to check inverter/ compressor".	—	○
5-time blink 2.5 seconds OFF	Discharge temperature	—	Temperature of discharge temperature thermistor exceeds 116°C, compressor stops. Compressor can restart if discharge temperature thermistor reads 100°C or less 3 minutes later.	•Check refrigerant circuit and refrigerant amount. •Refer to 12-5.Ⓚ"Check of LEV".	—	○
6-time blink 2.5 seconds OFF	High pressure	—	Temperature of indoor coil thermistor exceeds 70°C in HEAT mode. Temperature of defrost thermistor exceeds 70°C in COOL mode.	•Check refrigerant circuit and refrigerant amount. •Check stop valve.	—	○
7-time blink 2.5 seconds OFF	Fin temperature/P.C. board temperature	7-time blink 2.5 seconds OFF	Temperature of fin temperature thermistor on the inverter P.C. board exceeds 75 ~ 86°C (**MUZ-AP25/35/42/50/60**) / 75 ~ 80°C (**MUZ-AP71**), or temperature of P.C. board temperature thermistor on the inverter P.C. board exceeds 72 ~ 85°C (**MUZ-AP25/35/42/50/60**) / 70 ~ 75°C (**MUZ-AP71**).	•Check around outdoor unit. •Check outdoor unit air passage. •Refer to 12-5.Ⓘ"Check of outdoor fan motor".	—	○
8-time blink 2.5 seconds OFF	Outdoor fan motor	—	Outdoor fan has stopped 3 times in a row within 30 seconds after outdoor fan startup.	•Refer to 12-5.Ⓘ"Check of outdoor fan motor". Refer to 12-5.Ⓛ"Check of inverter P.C. board".	—	○
9-time blink 2.5 seconds OFF	Nonvolatile memory data	5-time blink 2.5 seconds OFF	Nonvolatile memory data cannot be read properly.	•Replace the inverter P.C. board.	○	○
	Power module (IC700)	6-time blink 2.5 seconds OFF	The interface short circuit occurs in the output of the power module (IC700). The compressor winding shorts circuit.	•Refer to 12-5. Ⓐ"How to check inverter/ compressor".	—	

NOTE: Blinking patterns of this mode differ from the ones of TROUBLESHOOTING CHECK TABLE (12-3.).

Upper lamp (Indoor unit)	Abnormal point (Failure mode/protection)	LED indication (Outdoor P.C. board)	Condition	Remedy	Indoor/outdoor unit failure mode recall function	Outdoor unit failure mode recall function
10-time blink 2.5 seconds OFF	Discharge temperature	—	Temperature of discharge temperature thermistor has been 50°C or less for 20 minutes.	•Refer to 12-5.Ⓚ"Check of LEV". •Check refrigerant circuit and refrigerant amount.	—	○
11-time blink 2.5 seconds OFF	Bus-bar voltage (DC)	8-time blink 2.5 seconds OFF	Bus-bar voltage of inverter cannot be detected normally.	•Refer to 12-5.Ⓐ"How to check inverter/ compressor".	—	○
	Each phase current of compressor	9-time blink 2.5 seconds OFF	Each phase current of compressor cannot be detected normally.			
14-time blink 2.5 seconds OFF	Stop valve (Closed valve)	14-time blink 2.5 seconds OFF	Closed valve is detected by compressor current.	•Check stop valve.	○	○
	4-way valve/ Pipe temperature	16-time blink 2.5 seconds OFF	The 4-way valve does not work properly. The indoor coil thermistor detects an abnormal temperature.	•Check the 4-way valve. •Replace the inverter P.C. board.		
16-time blink 2.5 seconds OFF	Outdoor refrigerant system abnormality	1-time blink 2.5 seconds OFF	A closed valve and air trapped in the refrigerant circuit are detected based on the temperature sensed by the indoor and outdoor thermistors and the current of the compressor.	•Check for a gas leak in a connecting piping etc. •Check the stop valve. •Refer to 12-5. Ⓝ "Check of outdoor refrigerant circuit".	○	○

12-3. TROUBLESHOOTING CHECK TABLE

No.	Symptom	LED indication	Abnormal point/ Condition	Condition	Remedy
1	Outdoor unit does not operate.	1-time blink every 2.5 seconds	Outdoor power system	Overcurrent protection cut-out operates 3 consecutive times within 1 minute after the compressor gets started.	•Reconnect connector of compressor. •Refer to 12-5.Ⓐ "How to check inverter/compressor". •Check stop valve.
2			Outdoor thermistors	Discharge temperature thermistor, fin temperature thermistor, defrost thermistor, outdoor heat exchanger temperature thermistor or ambient temperature thermistor shorts or opens during compressor running.	•Refer to 12-5.Ⓖ "Check of outdoor thermistors".
				P.C. board temperature thermistor shorts or opens during compressor running.	•Replace inverter P.C. board.
3			Outdoor control system	Nonvolatile memory data cannot be read properly. (Upper lamp of OPERATION INDICATOR lamp on the indoor unit lights up or blinks 7-time.)	•Replace inverter P.C. board.
4		6-time blink 2.5 seconds OFF	Serial signal	The communication fails between the indoor and outdoor unit for 3 minutes.	•Refer to 12-5.Ⓜ "How to check miswiring and serial signal error.
5		11-time blink 2.5 seconds OFF	Stop valve/ Closed valve	Closed valve is detected by compressor current.	•Check stop valve.
6		14-time blink 2.5 seconds OFF	Outdoor unit (Other abnormality)	Outdoor unit is defective.	•Refer to 12-2.2. "Flow chart of the detailed outdoor unit failure mode recall function".
7		16-time blink 2.5 seconds OFF	4-way valve/ Pipe temperature	The 4-way valve does not work properly. The indoor coil thermistor detects an abnormal temperature.	•Refer to 12-5.Ⓗ "Check of R.V. coil". •Replace the inverter P.C. board.
8		17-time blink 2.5 seconds OFF	Outdoor refrigerant system abnormality	A closed valve and air trapped in the refrigerant circuit are detected based on the temperature sensed by the indoor and outdoor thermistors and the current of the compressor.	•Check for a gas leak in a connecting piping etc. •Check the stop valve. •Refer to 12-5. Ⓝ "Check of outdoor refrigerant circuit".
9	'Outdoor unit stops and restarts 3 minutes later' is repeated.	2-time blink 2.5 seconds OFF	Overcurrent protection	Large current flows into power module (IC700).	•Reconnect connector of compressor. •Refer to 12-5.Ⓐ "How to check inverter/compressor". •Check stop valve.
10		3-time blink 2.5 seconds OFF	Discharge temperature overheat protection	Temperature of discharge temperature thermistor exceeds 116°C, compressor stops. Compressor can restart if discharge temperature thermistor reads 100°C or less 3 minutes later.	•Check refrigerant circuit and refrigerant amount. •Refer to 12-5.Ⓚ "Check of LEV".
11		4-time blink 2.5 seconds OFF	Fin temperature / P.C. board temperature thermistor overheat protection	Temperature of fin temperature thermistor on the heat sink exceeds 75 ~ 86°C (**MUZ-AP25/35/42/50/60**)/75 ~ 80°C (**MUZ-AP71**) or temperature of P.C. board temperature thermistor on the inverter P.C. board exceeds 72 ~ 85°C (**MUZ-AP25/35/42/50/60**)/70 ~ 75°C (**MUZ-AP71**).	•Check around outdoor unit. •Check outdoor unit air passage. •Refer to 12-5.Ⓘ "Check of outdoor fan motor".
12		5-time blink 2.5 seconds OFF	High pressure protection	Indoor coil thermistor exceeds 70°C in HEAT mode. Defrost thermistor exceeds 70°C in COOL mode.	•Check refrigerant circuit and refrigerant amount. •Check stop valve.
13		8-time blink 2.5 seconds OFF	Compressor synchronous abnormality	The waveform of compressor current is distorted.	•Reconnect connector of compressor. •Refer to 12-5.Ⓐ "How to check inverter/compressor".
14		10-time blink 2.5 seconds OFF	Outdoor fan motor	Outdoor fan has stopped 3 times in a row within 30 seconds after outdoor fan startup.	•Refer to 12-5.Ⓘ "Check of outdoor fan motor. •Refer to 12-5.Ⓛ "Check of inverter P.C. board.
15		12-time blink 2.5 seconds OFF	Each phase current of compressor	Each phase current of compressor cannot be detected normally.	•Refer to 12-5.Ⓐ "How to check inverter/compressor".
16		13-time blink 2.5 seconds OFF	Bus-bar voltage (DC)	Bus-bar voltage of inverter cannot be detected normally.	•It occurs with following case. Instantaneous power voltage drop. (Short time power failure) (**MUZ-AP71**) •Refer to 12-5. Ⓙ "Check of power supply". (**MUZ-AP71**) •Refer to 12-5.Ⓐ "How to check inverter/compressor".
17	Outdoor unit operates.	1-time blink 2.5 seconds OFF	Frequency drop by current protection	**MUZ-AP25/35/42/50/60**: When the input current exceeds approximately 10A, compressor frequency lowers. **MUZ-AP71**: Current from power outlet is nearing breaker capacity.	The unit is normal, but check the following. •Check if indoor filters are clogged. •Check if refrigerant is short. •Check if indoor/outdoor unit air circulation is short cycled.
18		3-time blink 2.5 seconds OFF	Frequency drop by high pressure protection	Temperature of indoor coil thermistor exceeds 55°C in HEAT mode, compressor frequency lowers.	
19			Frequency drop by defrosting in COOL mode	Indoor coil thermistor reads 8°C or less in COOL mode, compressor frequency lowers.	
		4-time blink 2.5 seconds OFF	Frequency drop by discharge temperature protection	Temperature of discharge temperature thermistor exceeds 111°C, compressor frequency lowers.	•Check refrigerant circuit and refrigerant amount. •Refer to 12-5.Ⓚ "Check of LEV". •Refer to 12-5.Ⓖ "Check of outdoor thermistors".
20		**MUZ-AP25/35/42** 5-time blink 2.5 seconds OFF	Outside temperature thermistor protection	When the outside temperature thermistor shorts or opens, protective operation without that thermistor is performed.	•Refer to 12-5. Ⓖ Check of outdoor thermistors.

No.	Symptom	LED indication	Abnormal point/ Condition	Condition	Remedy
21	Outdoor unit operates.	7-time blink 2.5 seconds OFF	Low discharge temperature protection	Temperature of discharge temperature thermistor has been 50°C or less for 20 minutes.	•Refer to 12-5.Ⓚ "Check of LEV". •Check refrigerant circuit and refrigerant amount.
22		8-time blink 2.5 seconds OFF	**MUZ-AP25/35/42/50/60** PAM protection PAM: Pulse Amplitude Modulation	The overcurrent flows into PFC (Power factor correction: IC820) or the bus-bar voltage reaches 394 V or more, PAM stops and restarts.	This is not malfunction. PAM protection will be activated in the following cases: 1 Instantaneous power voltage drop. (Short time power failure) 2 When the power supply voltage is high.
			MUZ-AP71 Zero cross detecting circuit	Zero cross signal cannot be detected.	•It occurs with following cases. 1 Instantaneous power voltage drop. (Short time power failure) 2 Distortion of primary voltage •Refer to 12-5. Ⓙ "Check of power supply".
23		9-time blink 2.5 seconds OFF	Inverter check mode	The connector of compressor is disconnected, inverter check mode starts.	•Check if the connector of the compressor is correctly connected. Refer to 12-5.Ⓐ "How to check inverter/compressor".

NOTE: 1. The location of LED is illustrated at the right figure. Refer to 12-6.1.
2. LED is lit during normal operation.

The blinking frequency shows the number of times the LED blinks after every 2.5-second OFF.
(Example) When the blinking frequency is “2”.

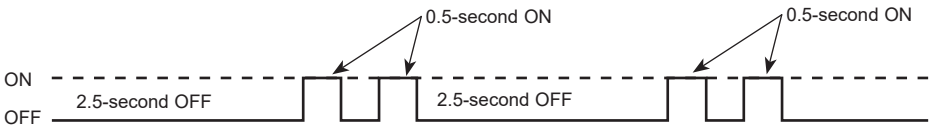

Inverter P.C. board

MUZ-AP25/35/42/50/60VG
MUZ-AP25/35/42/50VGH

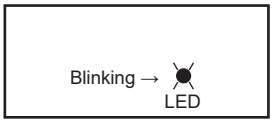

MUZ-AP71VG

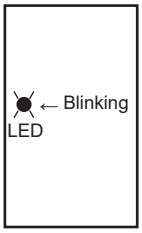

12-4. TROUBLESHOOTING CRITERION OF MAIN PARTS

<table>
<tr><th>Part name</th><th>Check method and criterion</th><th>Figure</th></tr>
<tr><td>Defrost thermistor (RT61)

Fin temperature thermistor (RT64)

Ambient temperature thermistor (RT65)

Outdoor heat exchanger temperature thermistor (RT68)</td><td>Measure the resistance with a multimeter.

Refer to 12-6. “Test point diagram and voltage”, 1. “Inverter P.C. board”, for the chart of thermistor.</td><td></td></tr>
<tr><td>Discharge temperature thermistor (RT62)</td><td>Measure the resistance with a multimeter. Before measurement, hold the thermistor with your hands to warm it up.

Refer to 12-6. “Test point diagram and voltage”, 1. “Inverter P.C. board”, for the chart of thermistor.</td><td></td></tr>
<tr><td>Compressor</td><td>Measure the resistance between terminals using a multimeter.
(Temperature: -10 ~ 40°C)
<table>
<tr><th></th><th colspan="3">Normal (Ω)</th></tr>
<tr><th></th><th>MUZ-AP25/35VG
MUZ-AP25/35VGH</th><th>MUZ-AP42/50/60VG
MUZ-AP42/50VGH</th><th>MUZ-AP71VG</th></tr>
<tr><td>U-V
U-W
V-W</td><td>E1, ET1, E2, ET2, ER2:1.59 ~ 2.16
E3, ET3, ER3:2.79 ~ 3.44</td><td>0.82 ~ 1.11</td><td>0.87 ~ 1.18</td></tr>
</table></td><td> 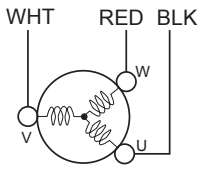
</td></tr>
<tr><td>Outdoor fan motor</td><td>Measure the resistance between lead wires using a multimeter.
(Temperature: -10 ~ 40°C)
<table>
<tr><th rowspan="2">Color of lead wire</th><th colspan="3">Normal (Ω)</th></tr>
<tr><th>MUZ-AP25/35/42VG
MUZ-AP25/35/42VGH</th><th>MUZ-AP50/60VG
MUZ-AP50VGH</th><th>MUZ-AP71VG</th></tr>
<tr><td>RED – BLK
BLK – WHT
WHT – RED</td><td>32 ~ 43</td><td>15 ~ 20</td><td>25 ~ 34</td></tr>
</table></td><td> 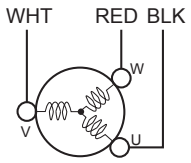
</td></tr>
<tr><td>R. V. coil (21S4)</td><td>Measure the resistance using a multimeter. (Temperature: -10 ~ 40°C)
<table>
<tr><th colspan="2">Normal (kΩ)</th></tr>
<tr><th>MUZ-AP25/35/42/50/60VG
MUZ-AP25/35/42/50VGH</th><th>MUZ-AP71VG</th></tr>
<tr><td>1.41 ~ 2.00</td><td>1.17 ~ 1.66</td></tr>
</table></td><td></td></tr>
<tr><td>Expansion valve coil (LEV)</td><td>Measure the resistance using a multimeter. (Temperature: -10 ~ 40°C)
<table>
<tr><th>Color of lead wire</th><th>Normal (Ω)</th></tr>
<tr><td>RED – ORN</td><td rowspan="4">37 ~ 54</td></tr>
<tr><td>RED – WHT</td></tr>
<tr><td>RED – BLU</td></tr>
<tr><td>RED – YLW</td></tr>
</table></td><td> 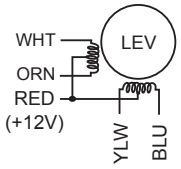
</td></tr>
<tr><td>Defrost heater
MUZ-AP•VGH</td><td>
<table>
<tr><th colspan="2">Normal (Ω)</th></tr>
<tr><th>MUZ-AP25/35/42VGH</th><th>MUZ-AP50VGH</th></tr>
<tr><td>802 ~ 980</td><td>370 ~ 428</td></tr>
</table></td><td></td></tr>
</table>

12-5. TROUBLESHOOTING FLOW

Ⓐ How to check inverter/compressor

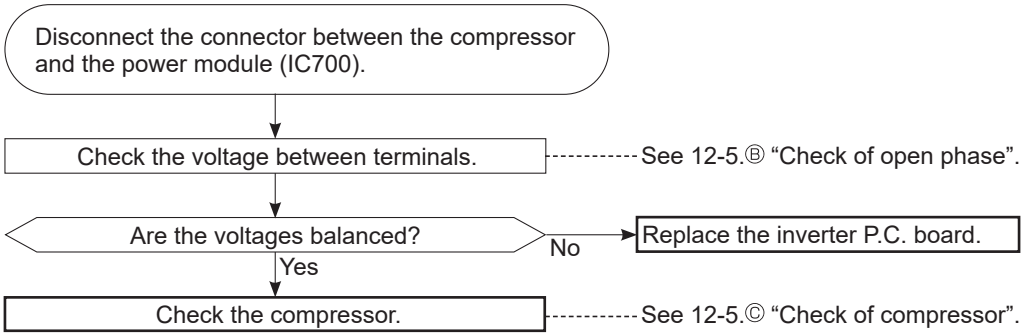

Ⓑ Check of open phase

- With the connector between the compressor and the power module (IC700) disconnected, activate the inverter and check if the inverter is normal by measuring **the voltage balance** between the terminals.

  Output voltage is 50 - 130 V. (The voltage may differ according to the multimeter.)

<< Operation method>>
Start cooling or heating operation by pressing the emergency operation switch on the indoor unit. (TEST RUN OPERATION: Refer to 9-3.)

<<Measurement point>>
At 3 points
BLK (U)-WHT (V)
BLK (U)-RED (W)
WHT(V)-RED (W)

*Measure AC voltage between the lead wires at 3 points.

NOTE: 1. Output voltage varies according to power supply voltage.
2. Measure the voltage by analog type multimeter.
3. During this check, LED of the inverter P.C. board blinks 9 times. (Refer to 12-6.1.)

Ⓒ Check of compressor

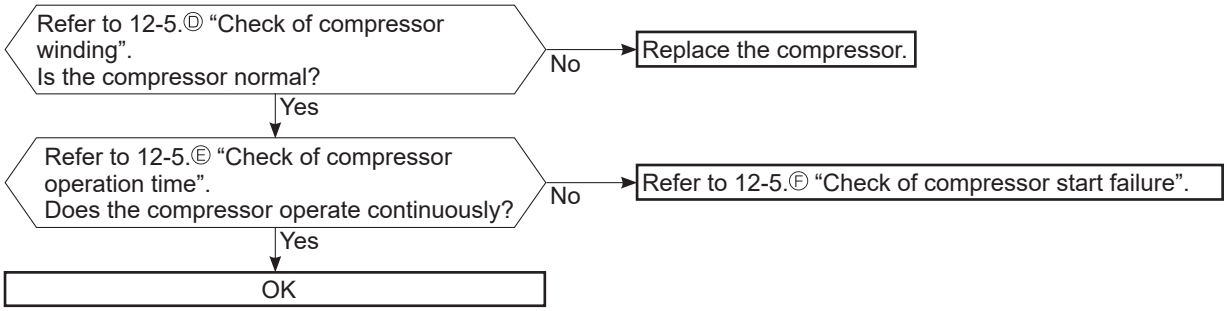

Ⓓ Check of compressor winding

● Disconnect the connector between the compressor and the power module (IC700), and measure the resistance between the compressor terminals.

<<Measurement point>>

At 3 points
BLK-WHT
BLK-RED
WHT-RED

*Measure the resistance between the lead wires at 3 points.

<<Judgement>>

Refer to 12-4.
0 [Ω] ·····Abnormal [short]
Infinite [Ω] ·····Abnormal [open]
NOTE: Be sure to zero the ohmmeter before measurement.

Ⓔ Check of compressor operation time

● Connect the compressor and activate the inverter. Then measure the time until the inverter stops due to overcurrent.
<<Operation method>>
Start heating or cooling operation by pressing the emergency operation switch on the indoor unit. (TEST RUN OPERATION: Refer to 9-3.)
<<Measurement>>
Measure the time from the start of compressor to the stop of compressor due to overcurrent.

<<Judgement>>

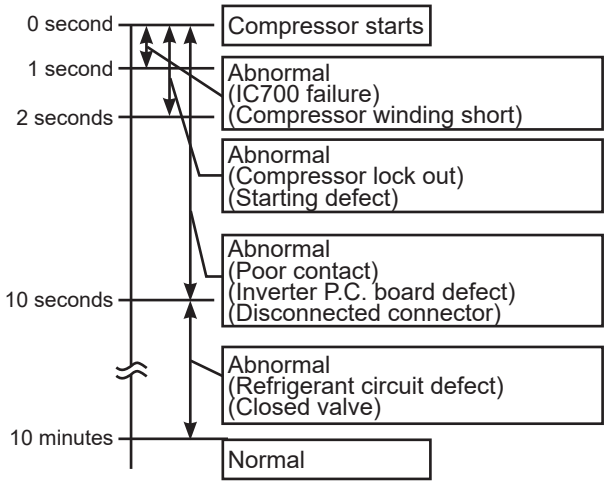

Ⓕ Check of compressor start failure

Confirm that ①~④ is normal.
•Electrical circuit check
①. Contact of the compressor connector
②. Output voltage of inverter P.C. board and balance of them (See 12-5.Ⓑ)
③. Direct current voltage between DB61(+) and (-) (**MUZ-AP25/35/42/50/60VG, MUZ-AP25/35/42/50VGH**)/IC700 (P) and (N) (**MUZ-AP71VG**) on the inverter P.C. board
④. Voltage between outdoor terminal block S1-S2

↓

Does the compressor run for 10 seconds or more after it starts?
- Yes → Check the refrigerant circuit. Check the stop valve.
- No ↓

After the compressor is heated with a drier, does the compressor start? *1
- No → Replace the compressor.
- Yes ↓

Compressor start failure. Activate pre-heat control. (Refer to 11-2. "PRE-HEAT CONTROL SETTING")

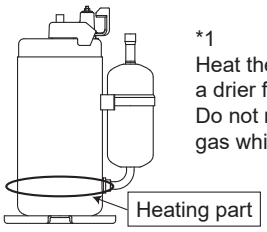

*1
Heat the compressor with a drier for about 20 minutes. Do not recover refrigerant gas while heating.

Ⓖ Check of outdoor thermistors

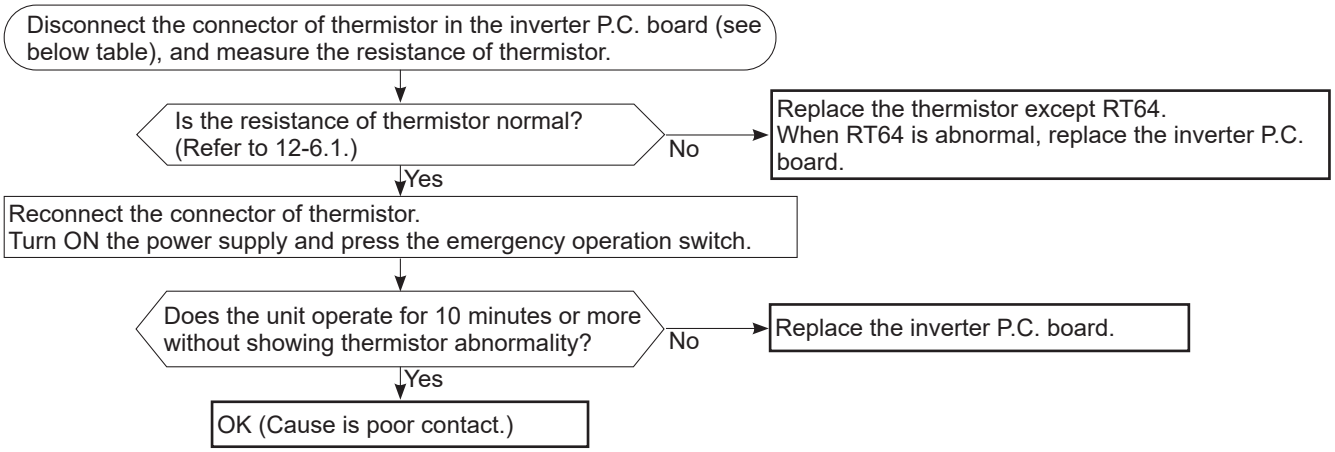

MUZ-AP25/35/42/50/60VG, MUZ-AP25/35/42/50VGH

Thermistor	Symbol	Connector, Pin No.	Board
Defrost	RT61	Between CN641 pin1 and pin2	Inverter P.C. board
Discharge temperature	RT62	Between CN641 pin3 and pin4	
Fin temperature	RT64	Between CN642 pin1 and pin2	
Ambient temperature	RT65	Between CN643 pin1 and pin2	
Outdoor heat exchanger temperature	RT68	Between CN644 pin1 and pin3	

MUZ-AP71VG

Thermistor	Symbol	Connector, Pin No.	Board
Defrost	RT61	Between CN671 pin1 and pin2	Inverter P.C. board
Discharge temperature	RT62	Between CN671 pin3 and pin4	
Fin temperature	RT64	Between CN673 pin1 and pin2	
Ambient temperature	RT65	Between CN672 pin1 and pin2	
Outdoor heat exchanger temperature	RT68	Between CN671 pin5 and pin6	

Ⓗ Check of R.V. coil

MUZ-AP25/35/42/50/60VG, MUZ-AP25/35/42/50VGH

* First of all, measure the resistance of R.V. coil to check if the coil is defective. Refer to 12-4.
* In case CN721 is disconnected or R.V. coil is open, voltage is generated between the terminal pins of the connector although no signal is being transmitted to R.V. coil.
  Check if CN721 is connected.

Unit operates in COOL mode even if it is set to HEAT mode.

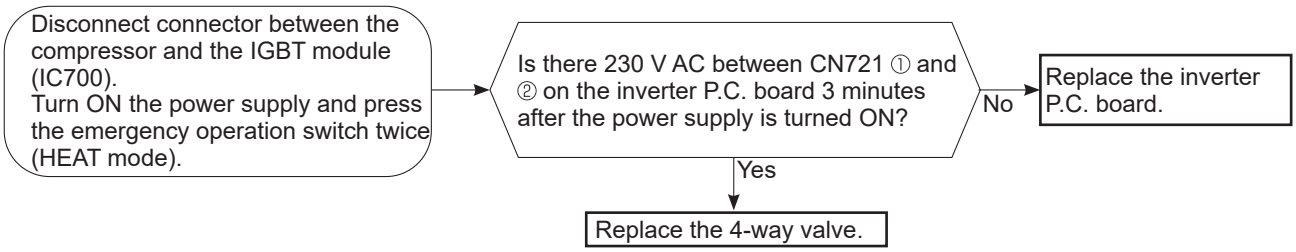

Unit operates in HEAT mode even if it is set to COOL mode.

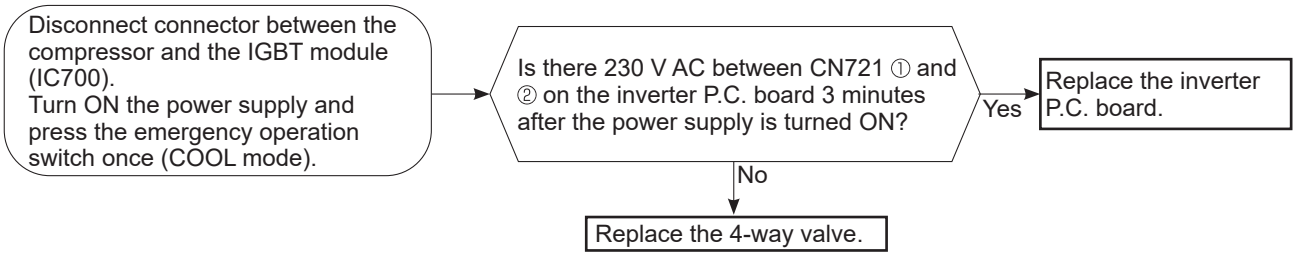

MUZ-AP71VG

* First of all, measure the resistance of R.V. coil to check if the coil is defective. Refer to 12-4.
* In case CN602 is disconnected or R.V. coil is open, voltage is generated between the terminal pins of the connector although no signal is being transmitted to R.V. coil.
  Check if CN602 is connected.

Unit operates in COOL mode even if it is set to HEAT mode.

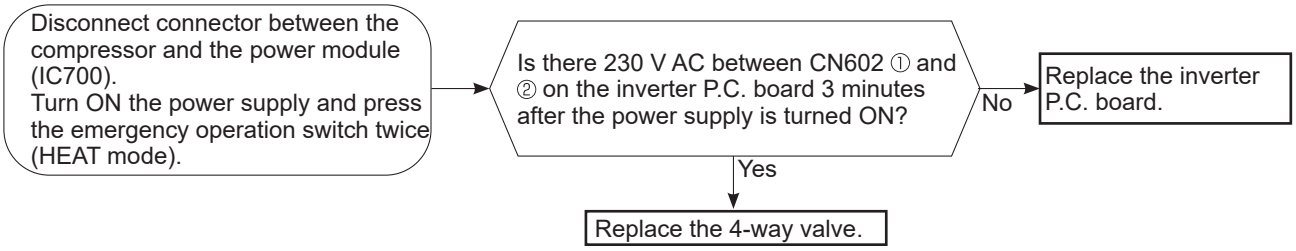

Unit operates in HEAT mode even if it is set to COOL mode.

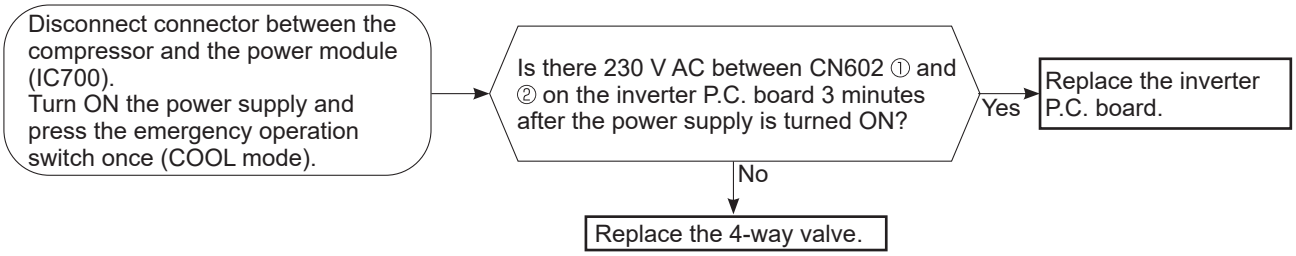

Ⓘ Check of outdoor fan motor

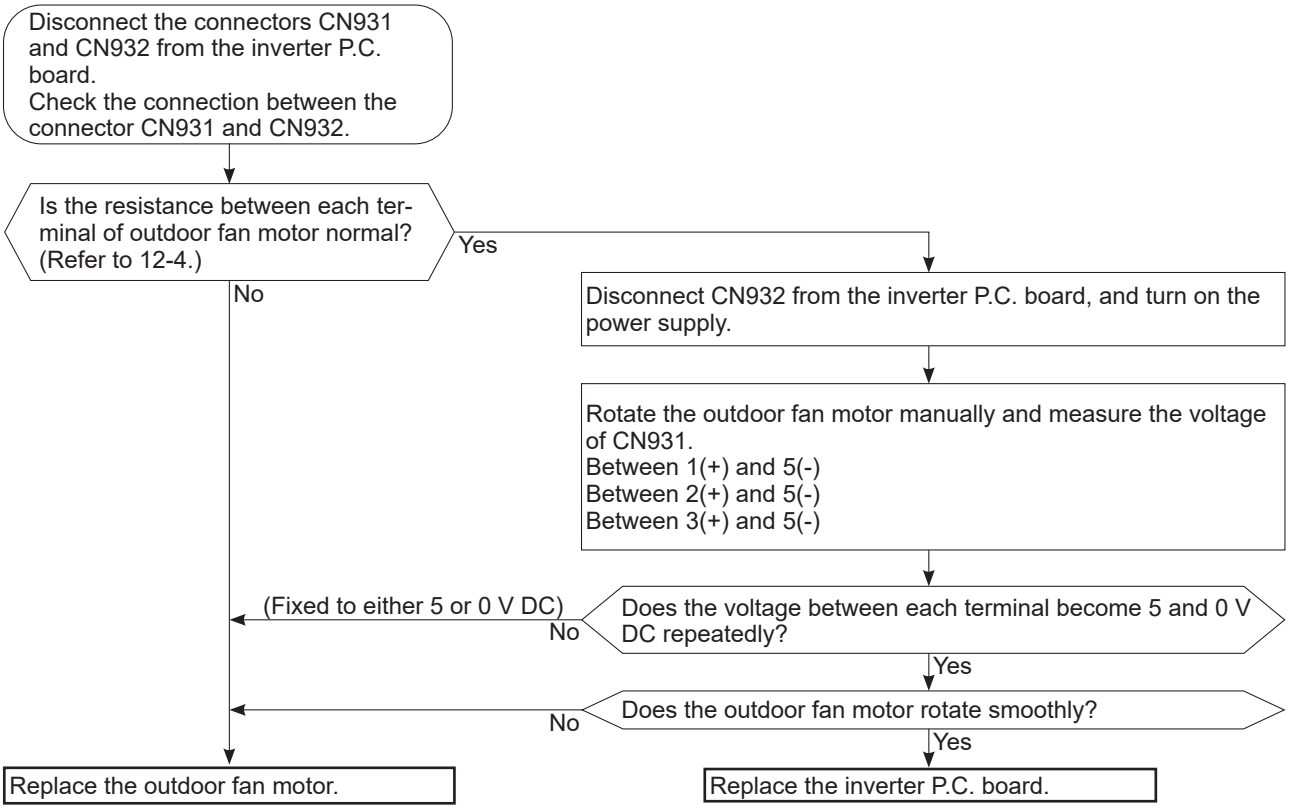

Ⓙ Check of power supply

Disconnect the connector between the compressor and the power module (IC700). Turn ON power supply and press the emergency operation switch.

Does the upper lamp of OPERATION INDICATOR lamp on the indoor unit light up?

- No → Is there voltage 230 V AC between the indoor terminal block S1 and S2?
  - Yes → Rectify indoor/outdoor connecting wire.
  - No → Replace the indoor electronic control P.C. board.
- Yes → Is there bus-bar voltage 260 - 370 V DC between DB61 (+) and DB61 (–) (**MUZ-AP25/35/42/50/60VG, MUZ-AP25/35/42/50VGH**)/325 - 370 V DC between IC700 (P) and (N) (**MUZ-AP71VG**) on the inverter P.C. board? (Refer to 12-6.1.)
  - Yes → Does LED on the inverter P.C. board light up or blink? (Refer to 12-6.1.)
    - No → Replace the inverter P.C. board.
    - Yes → If lights up, OK. If blinks, refer to 12-3.
  - No → Check the electric parts in main circuit.

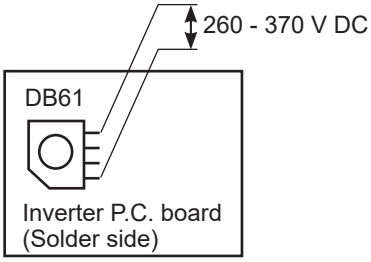

MUZ-AP25/35/42/50/60VG
MUZ-AP25/35/42/50VGH

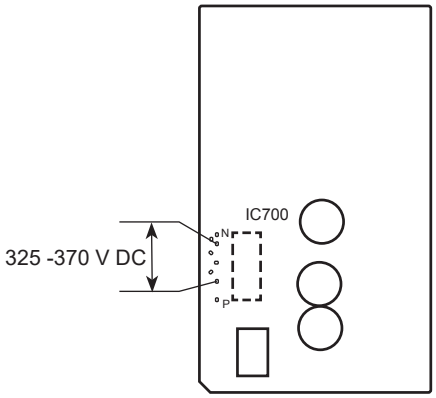

MUZ-AP71VG

Ⓚ Check of LEV (Expansion valve)

Turn ON the power supply.
<Preparation of the remote controller>
① While pressing both Operation select button and TEMP ⊕ button on the remote controller at the same time, press RESET button.
② First, release RESET button.
Hold down the other 2 buttons for another 3 seconds. Make sure that the indicators on the LCD screen shown in the right figure are all displayed. Then release the buttons.

MSZ-AP25/35/42/50VG
MSZ-AP25/35/42/50VGH

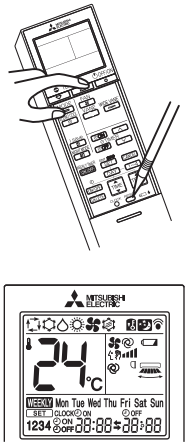

MSZ-AP60/71VG

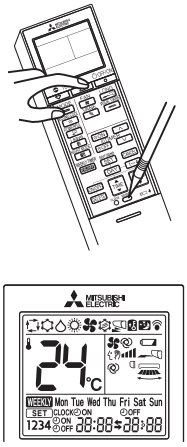

↓

Press OFF/ON (stop/operate) button of the remote controller (the set temperature is displayed) with the remote controller headed towards the indoor unit. *1

↓

Expansion valve operates in full-opening direction.

↓

Do you hear the expansion valve "click, click·····"?
Do you feel the expansion valve vibrate when touching it ?

Yes → OK

No ↓

Is LEV coil properly fixed to the expansion valve?

No → Properly fix the LEV coil to the expansion valve.

Yes ↓

Does the resistance of LEV coil have the characteristics? (Refer to 12-4.)

No → Replace the LEV coil.

Yes →

Measure each voltage between connector pins of CN724 on the inverter P.C. board.
1. Pin③(-) — Pin①(+)
2. Pin④(-) — Pin①(+)
3. Pin⑤(-) — Pin①(+)
4. Pin⑥(-) — Pin①(+)
Is there about 3 - 5 V AC between each?
NOTE: Measure the voltage by an analog multimeter.

No → Replace the inverter P.C. board.

Yes ↓

Replace the expansion valve.

*1. Regardless of normal or abnormal condition, a short beep is emitted once the signal is received.

NOTE: After check of LEV, take the following steps.
1. Turn OFF the power supply and turn it ON again.
2. Press RESET button on the remote controller.

Ⓛ Check of inverter P.C. board

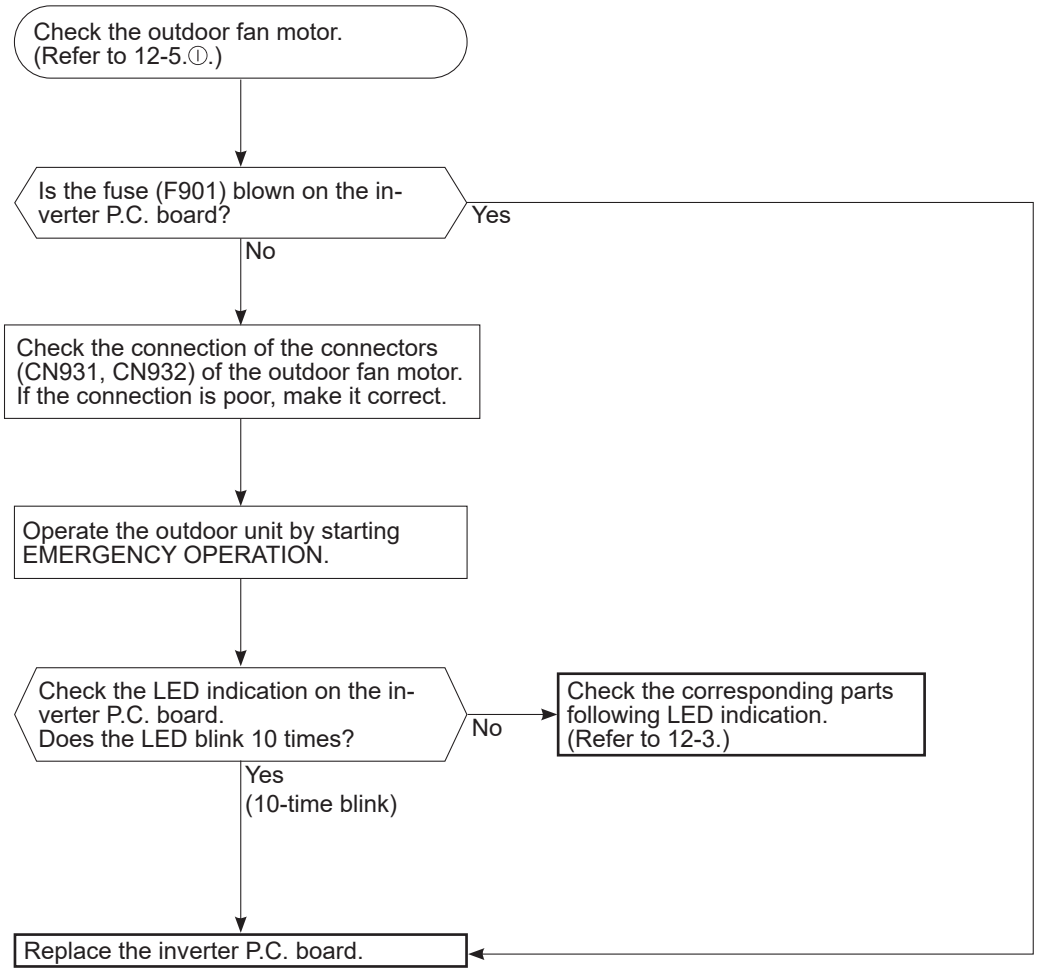

Ⓜ How to check miswiring and serial signal error

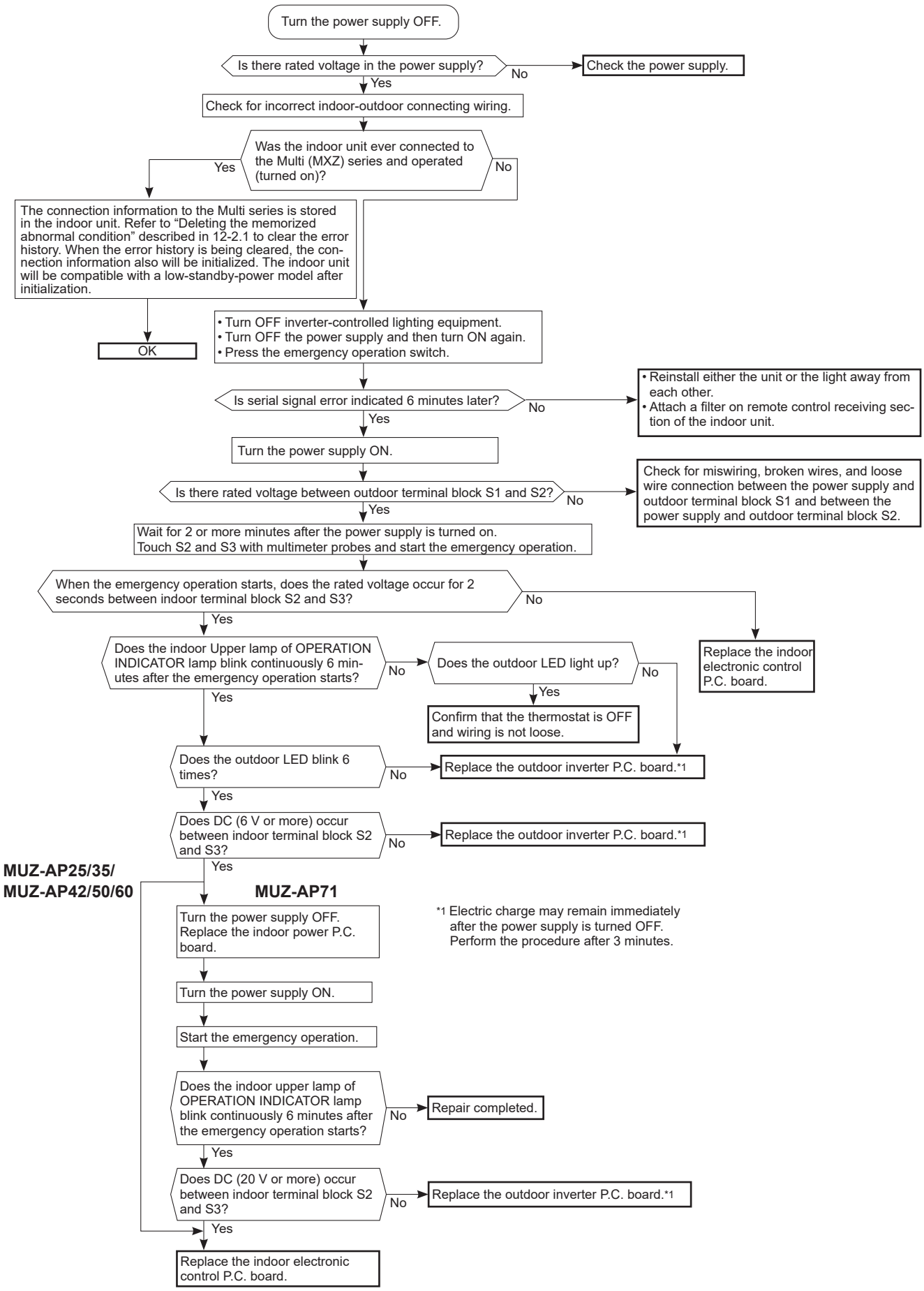

Ⓝ Check of the outdoor refrigerant circuit

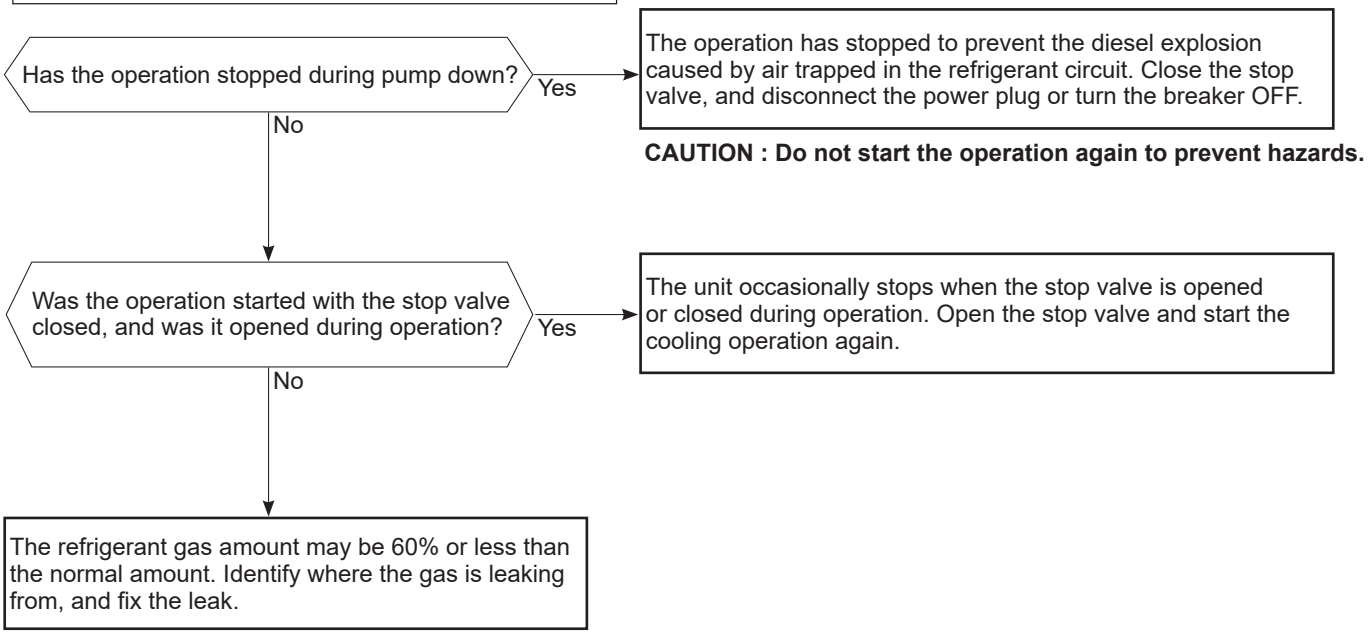

Ⓞ Electromagnetic noise enters into TV sets or radios

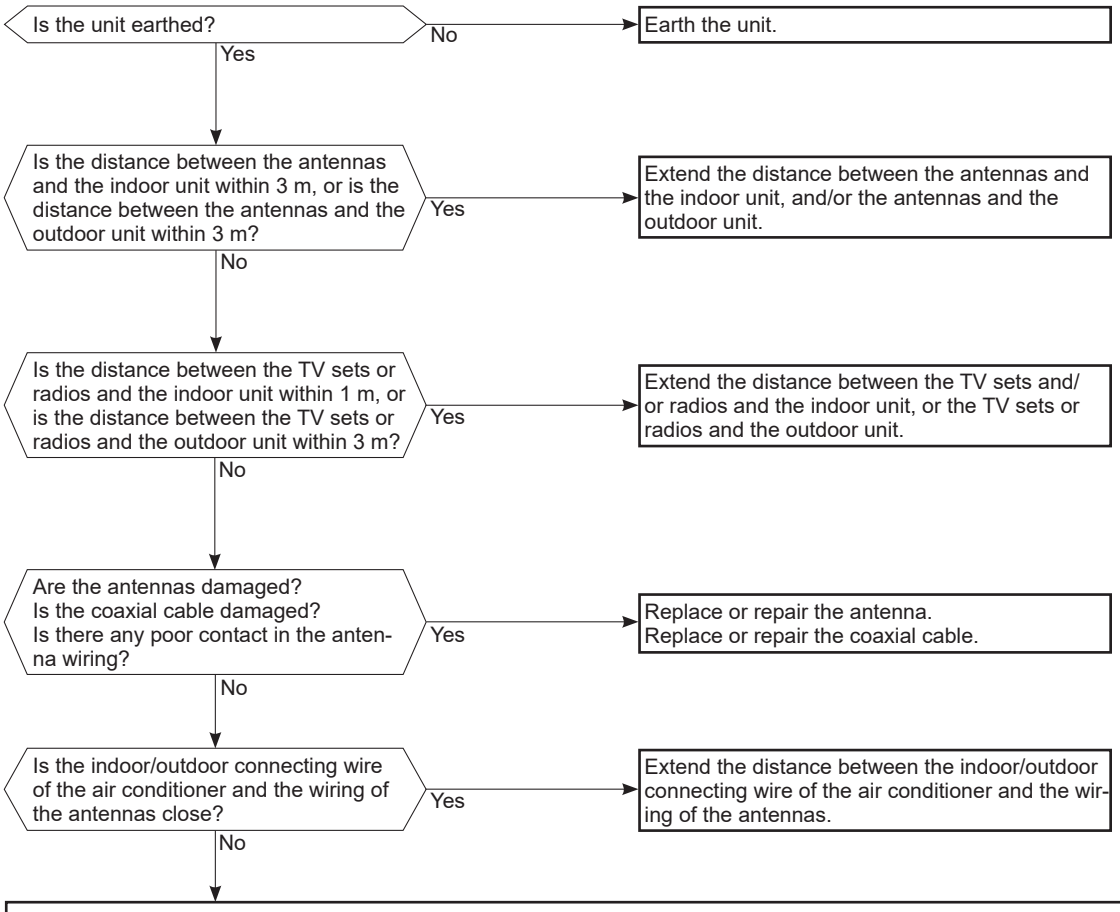

Even if all of the above conditions are fulfilled, the electromagnetic noise may enter, depending on the electric field strength or the installation condition (combination of specific conditions such as antennas or wiring).
Check the following before asking for service.

1. Devices affected by the electromagnetic noise
   TV sets, radios (FM/AM broadcast, shortwave)
2. Channel, frequency, broadcast station affected by the electromagnetic noise
3. Channel, frequency, broadcast station unaffected by the electromagnetic noise
4. Layout of:
   indoor/outdoor unit of the air conditioner, indoor/outdoor wiring, earth wire, antennas, wiring from antennas, receiver
5. Electric field intensity of the broadcast station affected by the electromagnetic noise
6. Presence or absence of amplifier such as booster
7. Operation condition of air conditioner when the electromagnetic noise enters in
   1) Turn OFF the power supply once, and then turn ON the power supply. In this situation, check for the electromagnetic noise.
   2) Within 3 minutes after turning ON the power supply, press OFF/ON (stop/operate) button on the remote controller for power ON, and check for the electromagnetic noise.
   3) After a short time (3 minutes later after turning ON), the outdoor unit starts running. During operation, check for the electromagnetic noise.
   4) Press OFF/ON (stop/operate) button on the remote controller for power OFF, when the outdoor unit stops but the indoor/outdoor communication still runs on. In this situation, check for the electromagnetic noise.

12-6. TEST POINT DIAGRAM AND VOLTAGE

1. Inverter P.C. board

MUZ-AP25VG MUZ-AP35VG MUZ-AP42VG MUZ-AP50VG MUZ-AP60VG
MUZ-AP25VGH MUZ-AP35VGH MUZ-AP42VGH MUZ-AP50VGH

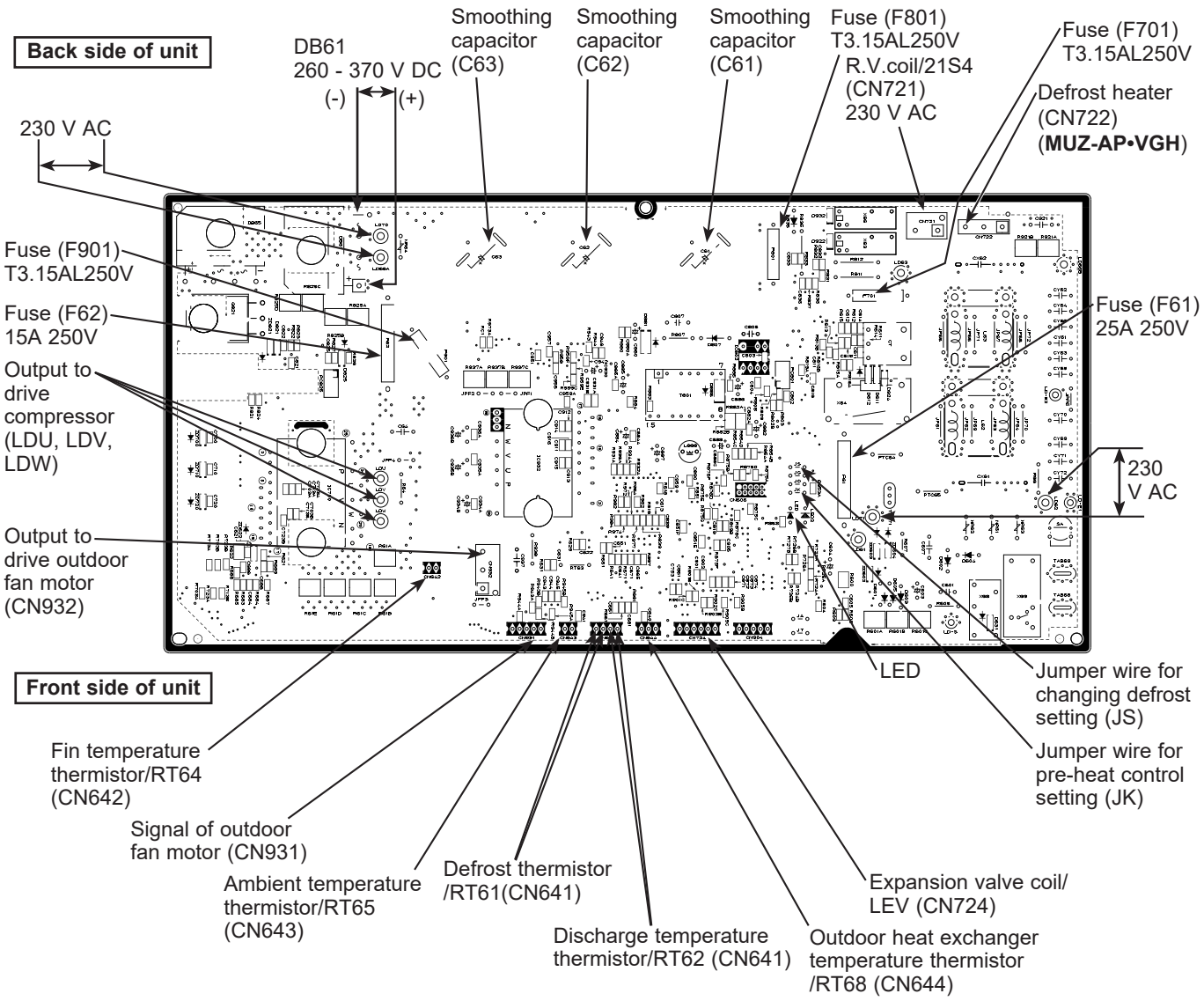

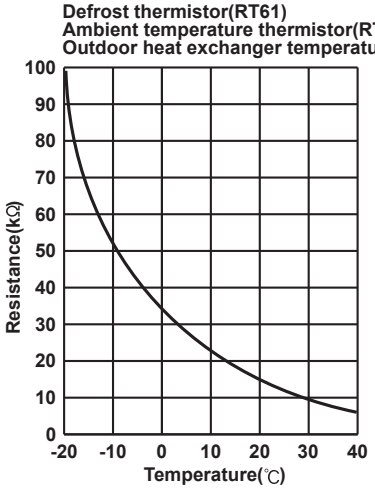

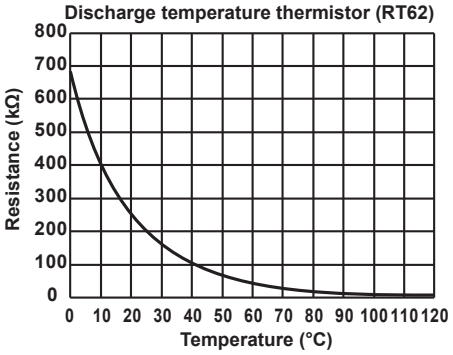

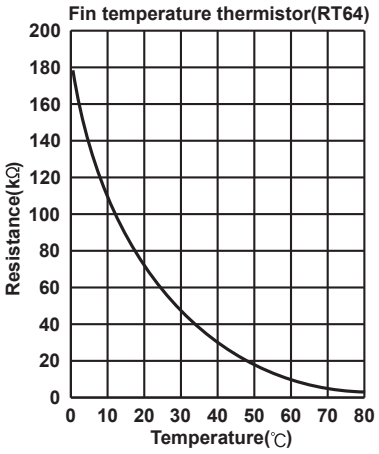

MUZ-AP71VG

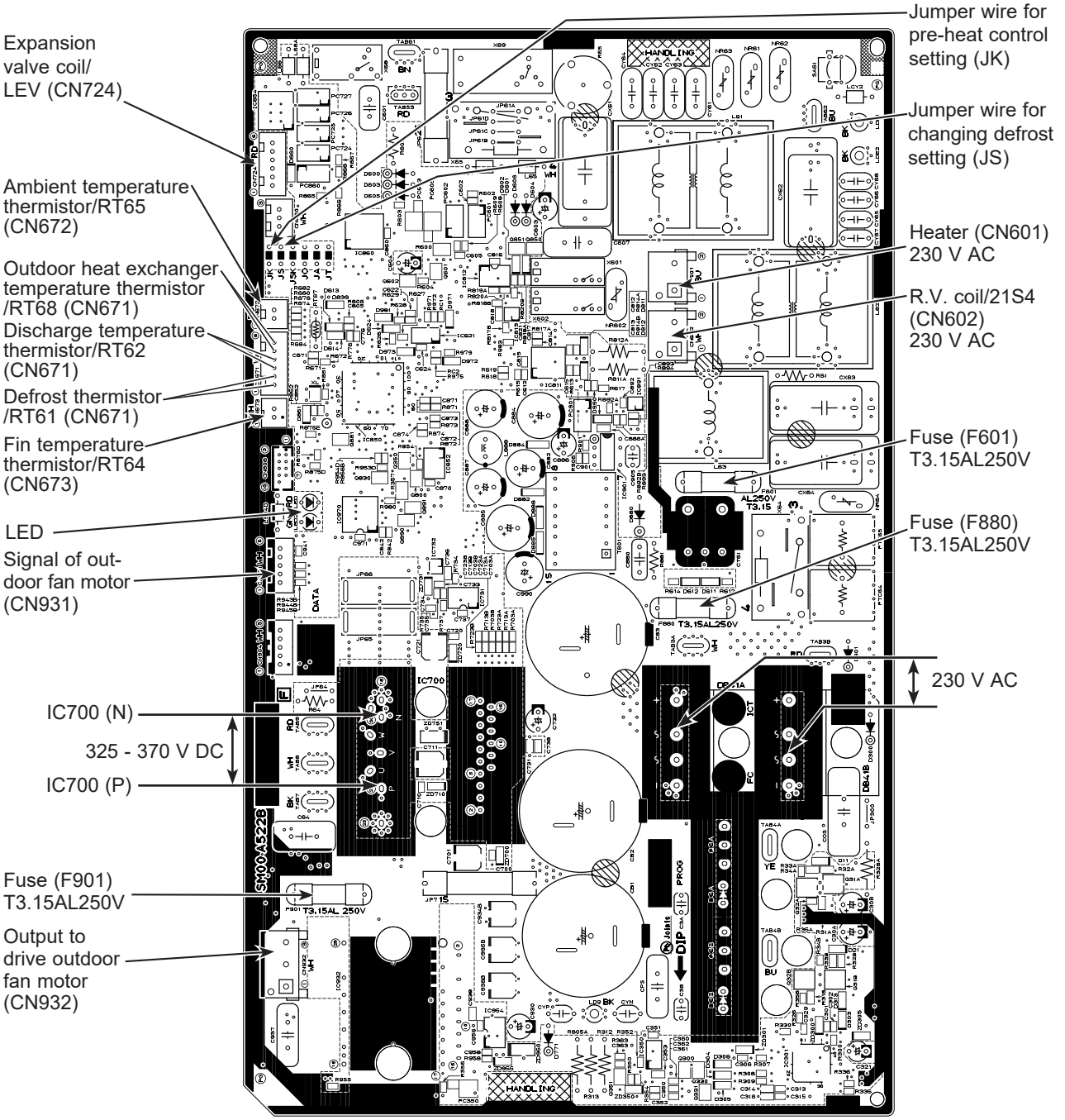
Expansion valve coil/ LEV (CN724)
Ambient temperature thermistor/RT65 (CN672)
Outdoor heat exchanger temperature thermistor /RT68 (CN671)
Discharge temperature thermistor/RT62 (CN671)
Defrost thermistor /RT61 (CN671)
Fin temperature thermistor/RT64 (CN673)
LED
Signal of out-door fan motor (CN931)
IC700 (N)
325 - 370 V DC
IC700 (P)
Fuse (F901) T3.15AL250V
Output to drive outdoor fan motor (CN932)
Jumper wire for pre-heat control setting (JK)
Jumper wire for changing defrost setting (JS)
Heater (CN601) 230 V AC
R.V. coil/21S4 (CN602) 230 V AC
Fuse (F601) T3.15AL250V
Fuse (F880) T3.15AL250V
230 V AC

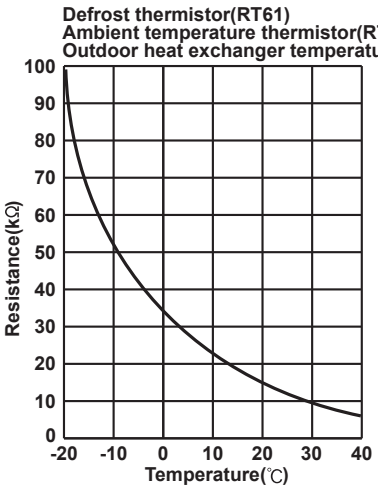
Defrost thermistor(RT61)
Ambient temperature thermistor(RT65)
Outdoor heat exchanger temperature thermistor(RT68)
Resistance(kΩ)
Temperature(℃)

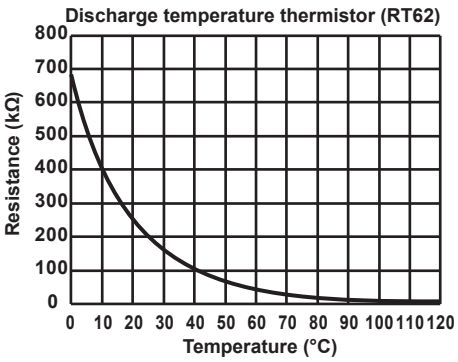
Discharge temperature thermistor (RT62)
Resistance (kΩ)
Temperature (°C)

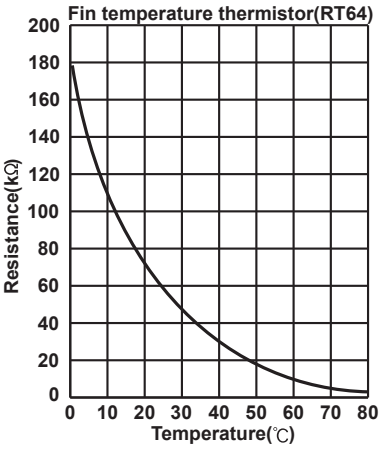
Fin temperature thermistor(RT64)
Resistance(kΩ)
Temperature(℃)

13 DISASSEMBLY INSTRUCTIONS

<Detaching method of the terminal with locking mechanism >

The terminal which has the locking mechanism can be detached as shown below.
There are 2 types of the terminal with locking mechanism.
The terminal without locking mechanism can be detached by pulling it out.
Check the shape of the terminal before detaching.

(1) Slide the sleeve and check if there is a locking lever or not.

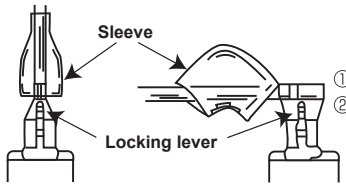

①Slide the sleeve.
②Pull the terminal while pushing the locking lever.

(2) The terminal with this connector shown below has the locking mechanism.

①Hold the sleeve, and pull out the terminal slowly.

13-1. MUZ-AP25VG MUZ-AP35VG MUZ-AP42VG MUZ-AP25VGH MUZ-AP35VGH MUZ-AP42VGH

NOTE: Turn OFF the power supply before disassembly.

——→: Indicates the visible parts in the photos/figures.
- - - →: Indicates the invisible parts in the photos/figures.

OPERATING PROCEDURE	PHOTOS/FIGURES
1. Removing the cabinet (1) Remove the screw fixing the service panel. (2) Pull down the service panel and remove it. (3) Disconnect the power supply cord and indoor/outdoor connecting wire. (4) Remove the screws fixing the top panel. (5) Remove the top panel. (6) Remove the screws fixing the cabinet. (7) Remove the cabinet. (8) Remove the screws fixing the back panel. (9) Remove the back panel.	**Photo 1** 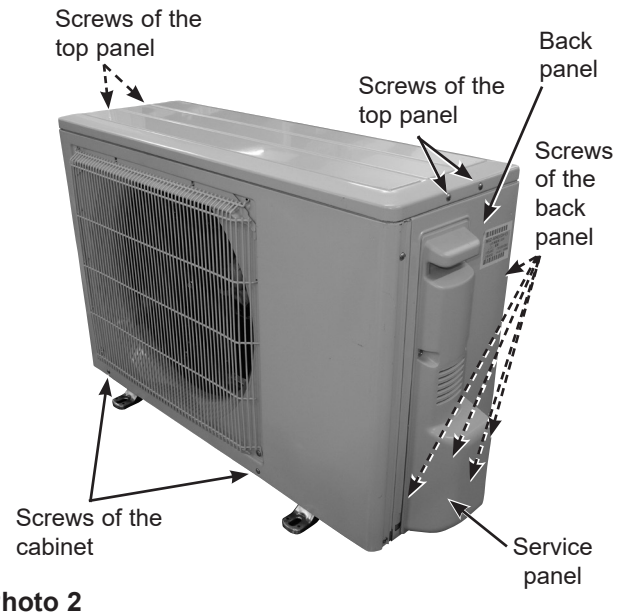 **Photo 2** 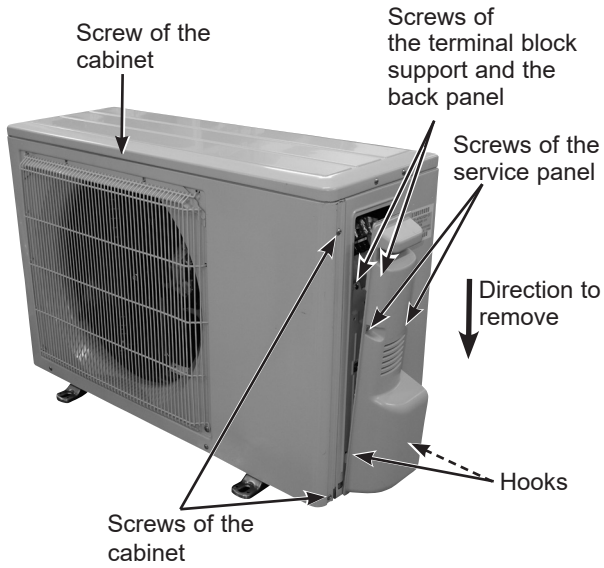

OPERATING PROCEDURE	PHOTOS/FIGURES
2. Removing the inverter assembly, inverter P.C. board (1) Remove the cabinet and panels. (Refer to section 1.) (2) Disconnect the lead wire to the reactor and the following connectors: <Inverter P.C. board> CN721 (R.V. coil) CN722 (Defrost heater)(**MUZ-AP•VGH**) CN931, CN932 (Fan motor) CN641 (Defrost thermistor and discharge temperature thermistor) CN643 (Ambient temperature thermistor) CN644 (Outdoor heat exchanger temperature thermistor) CN724 (LEV) (3) Remove the compressor connector (CN61). (4) Remove the screws fixing the heat sink support and the separator. (5) Remove the fixing screws of the terminal block support and the back panel. (6) Remove the inverter assembly. (7) Remove the screw of the earth wire and screw of the terminal block support. (8) Remove the heat sink support from the P.C. board support. (9) Remove the screw of the inverter P.C. board and remove the inverter P.C. board from the P.C. board support.	**Photo 3** 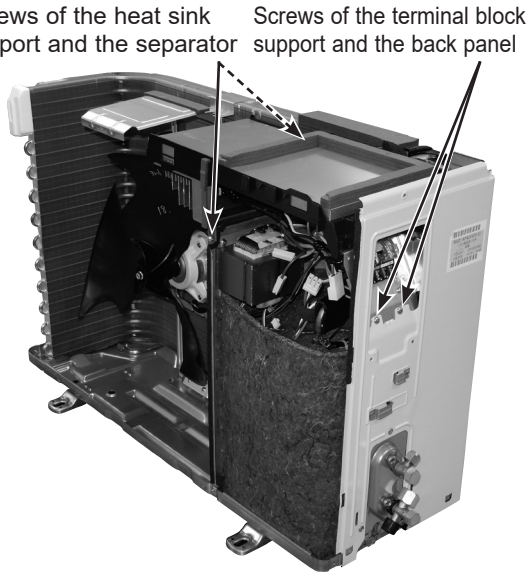 **Photo 4 (Inverter assembly)** 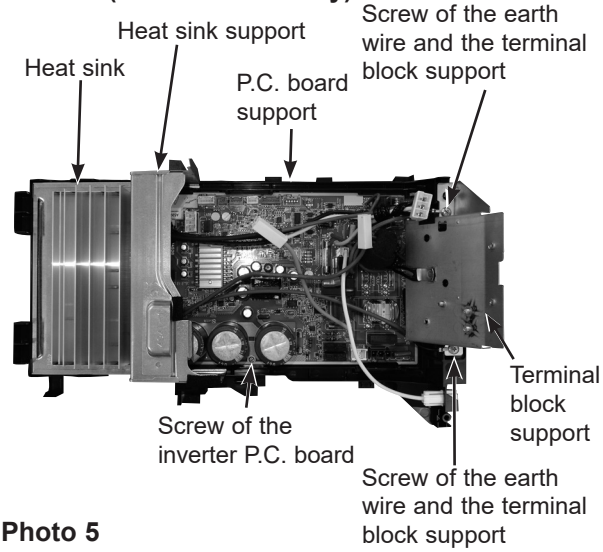
3. Removing R.V. coil (1) Remove the cabinet and panels. (Refer to section 1.) (2) Disconnect the following connectors: <Inverter P.C. board> CN721 (R.V. coil) (3) Remove the R.V. coil.	
4. Removing the discharge temperature thermistor, defrost thermistor, outdoor heat exchanger temperature thermistor and ambient temperature thermistor (1) Remove the cabinet and panels. (Refer to section 1.) (2) Disconnect the lead wire to the reactor and the following connectors: <Inverter P.C. board> CN641 (Defrost thermistor and discharge temperature thermistor) CN643 (Ambient temperature thermistor) CN644 (Outdoor heat exchanger temperature thermistor) (3) Pull out the discharge temperature thermistor from its holder. (4) Pull out the defrost thermistor from its holder. (Photo 6) (5) Pull out the outdoor heat exchanger temperature thermistor from its holder. (Photo 6) (6) Pull out the ambient temperature thermistor from its holder.	**Photo 5** 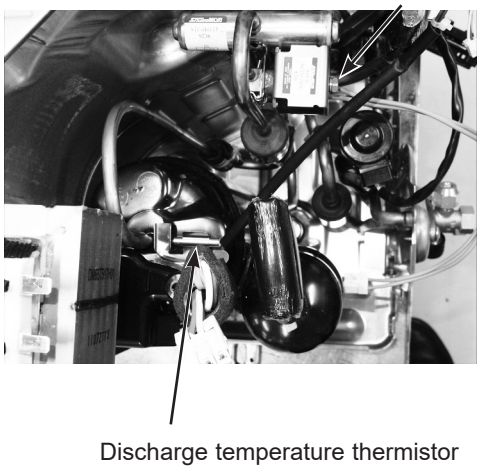

OPERATING PROCEDURE	PHOTOS/FIGURES

5. Removing outdoor fan motor

(1) Remove the cabinet and panels. (Refer to section 1.)
(2) Disconnect the following connectors:
<Inverter P.C. board>
CN931, CN932 (Fan motor)
(3) Remove the propeller fan nut.
(4) Remove the propeller fan.
(5) Remove the screws fixing the fan motor.
(6) Remove the fan motor.

Photo 6

MUZ-AP42VGH

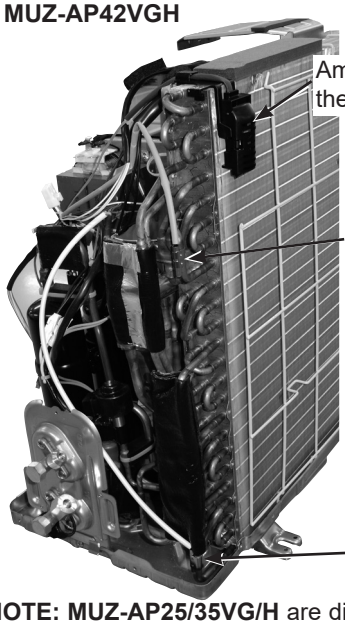

NOTE: MUZ-AP25/35VG/H are different in the installation position of thermistors.

6. Removing the compressor and 4-way valve

(1) Remove the cabinet and panels. (Refer to section 1.)
(2) Remove the inverter assembly. (Refer to section 2.)
(3) Recover gas from the refrigerant circuit.
NOTE: Recover gas from the pipes until the pressure gauge shows 0 kg/cm^2 (0 MPa).
(4) Detach the brazed part of the suction and the discharge pipe connected with compressor.
(5) Remove the nuts of compressor legs.
(6) Remove the compressor.
(7) Detach the brazed part of pipes connected with 4-way valve.

Photo 7

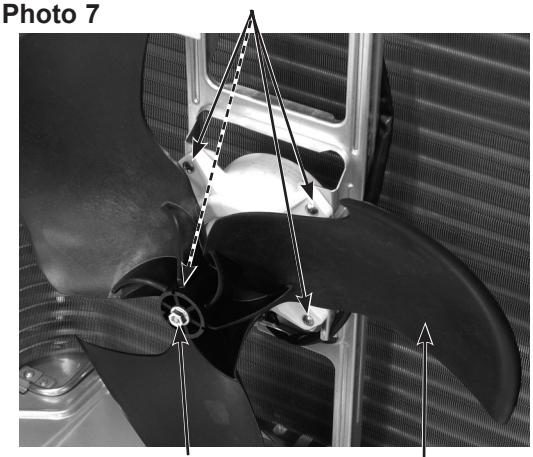

7. Removing the LEV assembly

(1) Detaching the brazed part of pipes connected with LEV valve.

Photo 9

Photo 8

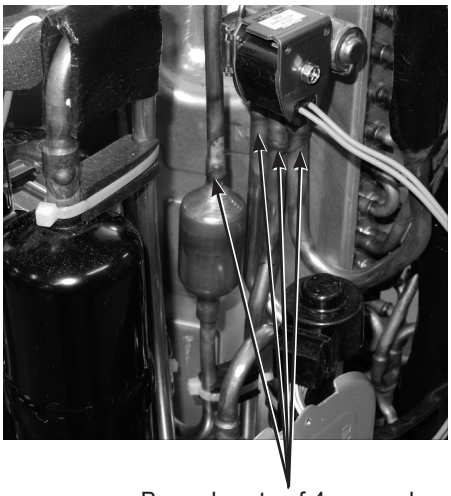

13-2. MUZ-AP50VG MUZ-AP60VG MUZ-AP50VGH

NOTE: Turn OFF the power supply before disassembly.

OPERATING PROCEDURE	PHOTOS/FIGURES
1. Removing the cabinet (1) Remove the screws of the service panel. (2) Remove the screws of the top panel. (3) Remove the screw of the valve cover. (4) Remove the service panel. (5) Remove the top panel. (6) Remove the valve cover. (7) Disconnect the power supply cord and indoor/outdoor connecting wire. (8) Remove the screws of the cabinet. (9) Remove the cabinet. (10) Remove the screws of the back panel. (11) Remove the back panel. **Photo 2** 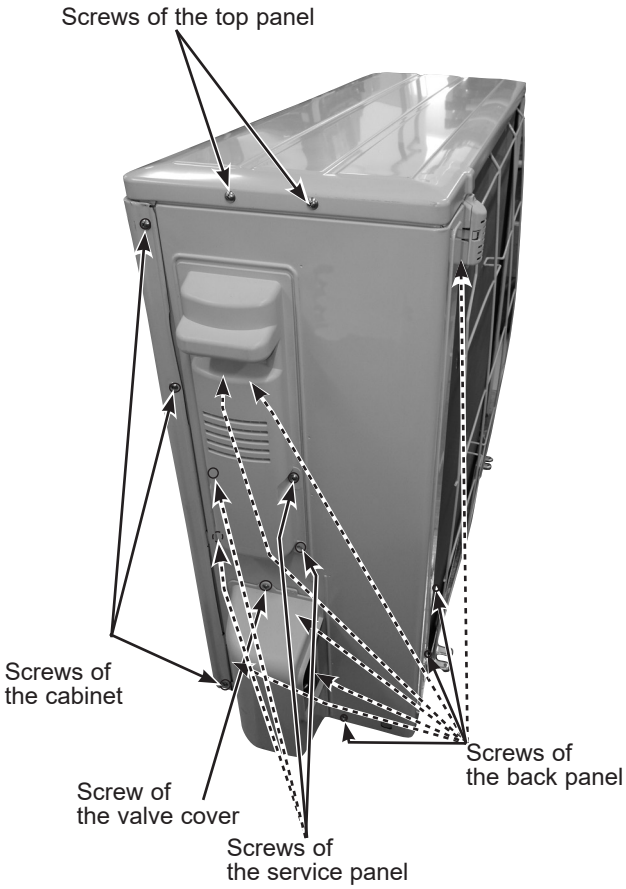 	**Photo 1** 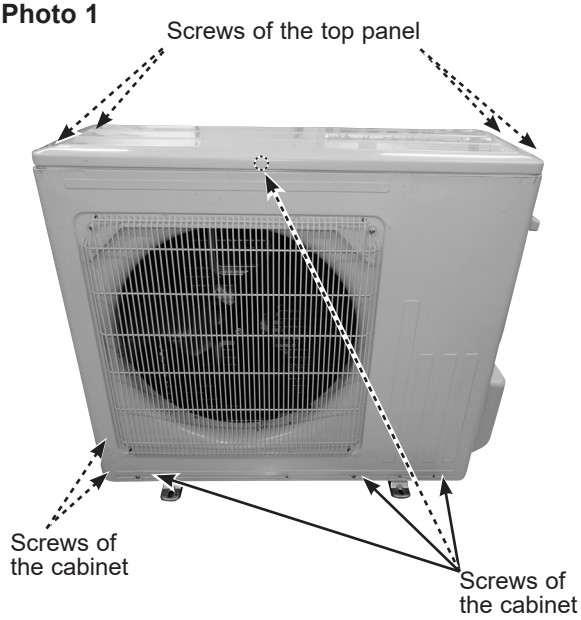

OPERATING PROCEDURE	PHOTOS/FIGURES

2. Removing the inverter assembly and inverter P.C. board

(1) Remove the cabinet and panels. (Refer to section 1.)
(2) Disconnect the lead wire to the reactor and the following connectors:
<Inverter P.C. board>
CN721 (R.V. coil)
CN722 (Defrost heater)(**MUZ-AP50VGH**)
CN931, CN932 (Fan motor)
CN641 (Defrost thermistor and discharge temperature thermistor)
CN643 (Ambient temperature thermistor)
CN644 (Outdoor heat exchanger temperature thermistor)
CN724 (LEV)
(3) Remove the compressor connector (CN61).
(4) Remove the screws fixing the heat sink support and the separator.
(5) Remove the fixing screw of the P.B. support and the separator.
(6) Remove the fixing screws of the terminal block support and the back panel.
(7) Remove the inverter assembly.
(8) Remove the heat sink support from the P.C. board support.
(9) Remove the screw of the inverter P.C. board and remove the inverter P.C. board from the P.C. board support.

*** Connection procedure when attaching the inverter P.C. board (Photo 4)**

1. Connect the lead wires of the heat exchanger temperature thermistor, the defrost thermistor and discharge temperature thermistor to the connector on the inverter P.C. board. Pull the lead wires toward you and put them on the right hook on the P.C. board support.
2. Connect the lead wires of the LEV to the connector on the inverter P.C. board. Pull the lead wires toward you and put them on the right hook on the P.C. board support.
3. Connect the lead wires of the ambient temperature thermistor to the connector on the inverter P.C. board. Pull the lead wires toward you and put them on the left hook on the P.C. board support so that the fan motor lead wires are bundled up as shown in Photo 4.

Photo 3

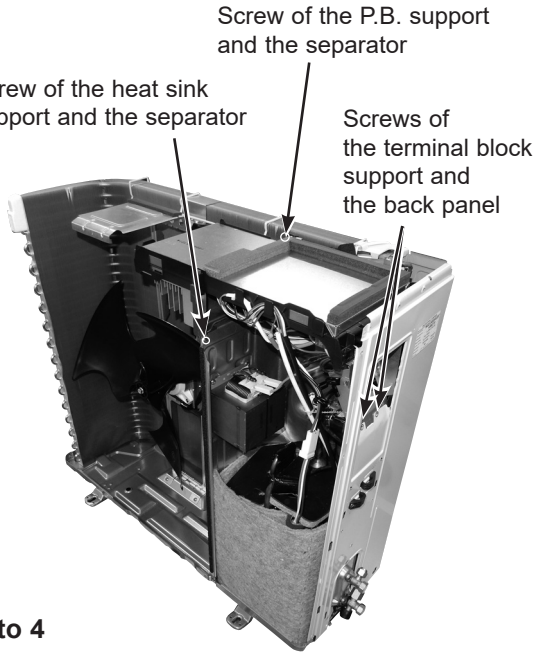

Photo 4

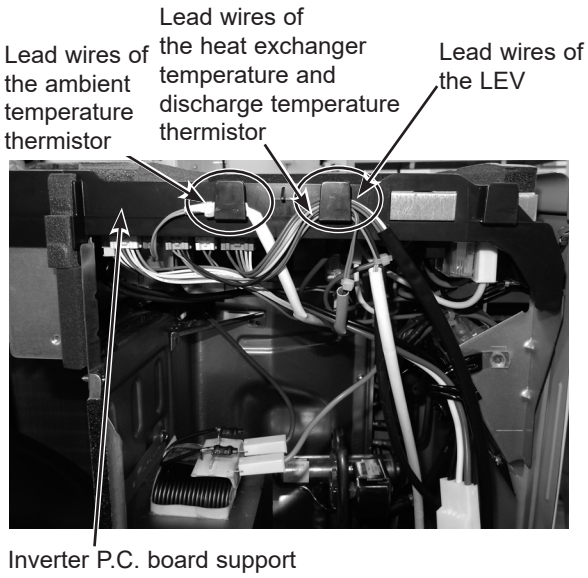

Photo 5 (Inverter assembly)

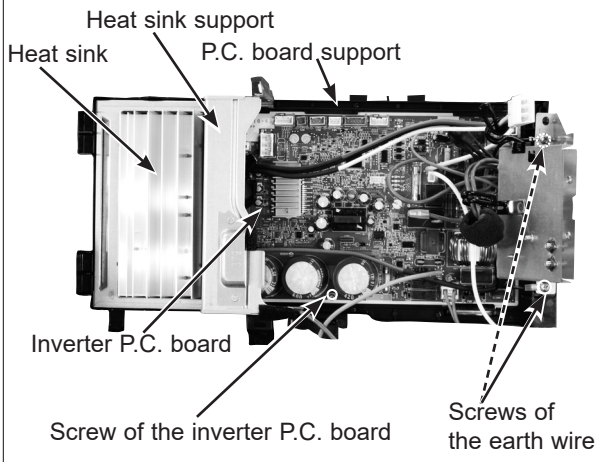

OPERATING PROCEDURE	PHOTOS/FIGURES
3. Removing R. V. coil (1) Remove the cabinet and panels. (Refer to section 1.) (2) Disconnect the following connectors: <Inverter P.C. board> CN721 (R.V. coil) (3) Remove the R.V. coil.	**Photo 6**
4. Removing the discharge temperature thermistor, defrost thermistor, outdoor heat exchanger temperature thermistor and ambient temperature thermistor (1) Remove the cabinet and panels. (Refer to section 1.) (2) Disconnect the lead wire to the reactor and the following connectors: <Inverter P.C. board> CN641 (Defrost thermistor and discharge temperature thermistor) CN643 (Ambient temperature thermistor) CN644 (Outdoor heat exchanger temperature thermistor) (3) Pull out the discharge temperature thermistor from its holder. (4) Pull out the defrost thermistor from its holder. (5) Pull out the outdoor heat exchanger temperature thermistor from its holder. (6) Pull out the ambient temperature thermistor from its holder.	**Photo 7** 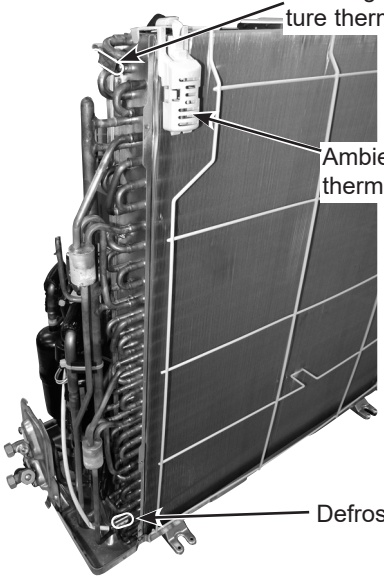
5. Removing outdoor fan motor (1) Remove the cabinet and panels. (Refer to section 1.) (2) Disconnect the following connectors: <Inverter P.C. board> CN931, CN932 (Fan motor) (3) Remove the propeller fan nut. (4) Remove the propeller fan. (5) Remove the screws fixing the fan motor. (6) Remove the fan motor.	**Photo 8** 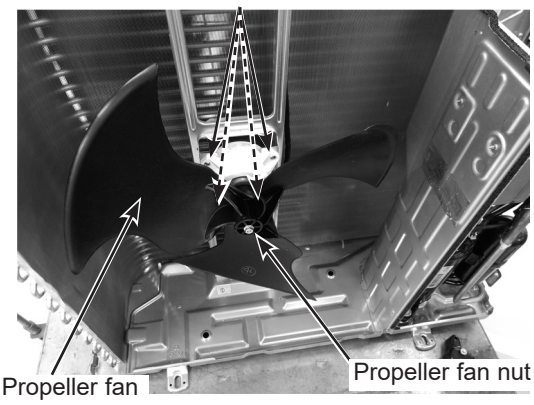

OPERATING PROCEDURE	PHOTOS/FIGURES
6. Removing the compressor and 4-way valve (1) Remove the cabinet and panels. (Refer to section 1.) (2) Remove the inverter assembly. (Refer to section 2.) (3) Recover gas from the refrigerant circuit. **NOTE:** Recover gas from the pipes until the pressure gauge shows 0 kg/cm^2 (0 MPa). (4) Detach the brazed part of the suction and the discharge pipe connected with compressor. (5) Remove the compressor nuts. (6) Remove the compressor. (7) Detach the brazed part of pipes connected with 4-way valve.	**Photo 9** 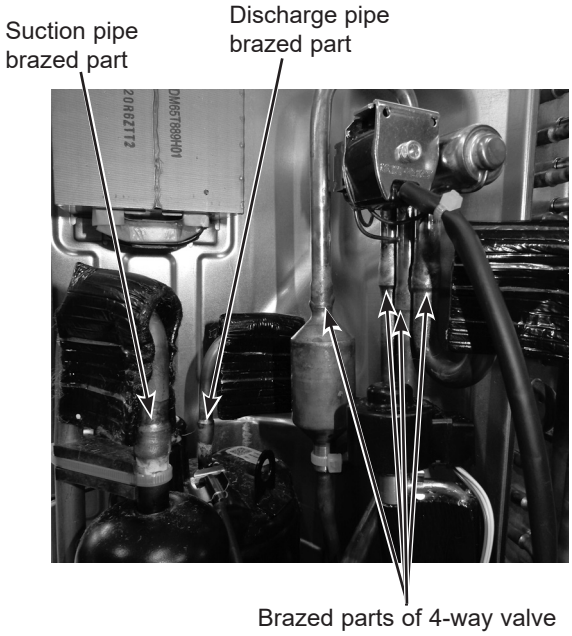

13-3. MUZ-AP71VG

NOTE: Turn OFF the power supply before disassembly.

OPERATING PROCEDURE	PHOTOS/FIGURES
1. Removing the cabinet (1) Remove the screws of the service panel. (2) Remove the screws of the top panel. (3) Remove the screw of the valve cover. (4) Remove the service panel. (5) Remove the top panel. (6) Remove the valve cover. (7) Disconnect the power supply cord and indoor/outdoor connecting wire. (8) Remove the screws of the cabinet. (9) Remove the cabinet. (10) Remove the screws of the back panel. (11) Remove the back panel. **Photo 2** 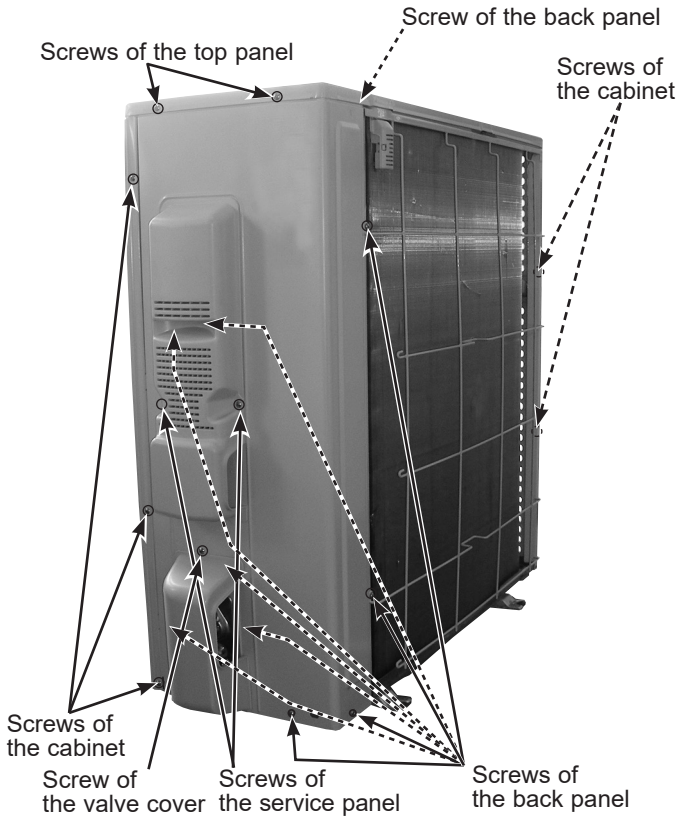 	**Photo 1** 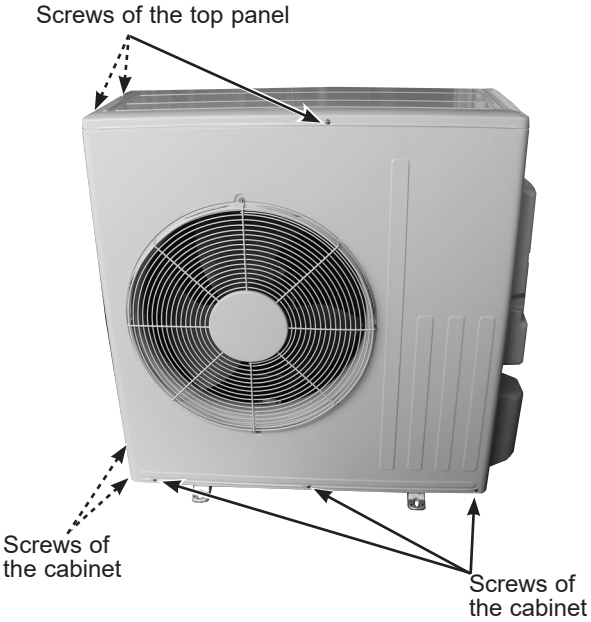

OPERATING PROCEDURE	PHOTOS/FIGURES

2. Removing the inverter assembly and inverter P.C. board

(1) Remove the cabinet and the service panel. (Refer to section 1.)
(2) Disconnect the lead wire to the reactor and the following connectors:
<Inverter P.C. board>
CN602 (R.V. coil)
CN931, CN932 (Fan motor)
CN671 (Defrost thermistor, discharge temperature thermistor and outdoor heat exchanger temperature thermistor)
CN672 (Ambient temperature thermistor)
CN724 (LEV)
(3) Remove the compressor connector.
(4) Remove the earth wires and the lead wires of the inverter P.C. board.
(5) Remove the screws of the P.B. support.
(6) Remove the P.B. support from the relay panel.
(7) Remove the screws of the inverter P.C. board.
(8) Remove the inverter P.C. board from P.B. support.

*** Notes about attaching the inverter P.C. board**

1. When attaching the inverter P.C. board, clip the lead wires of the reactor to the wire saddles on the bottom of relay panel.
2. After attaching the inverter P.C. board, make sure that the lead wires are connected and placed as shown in Photo 3.

Photo 3

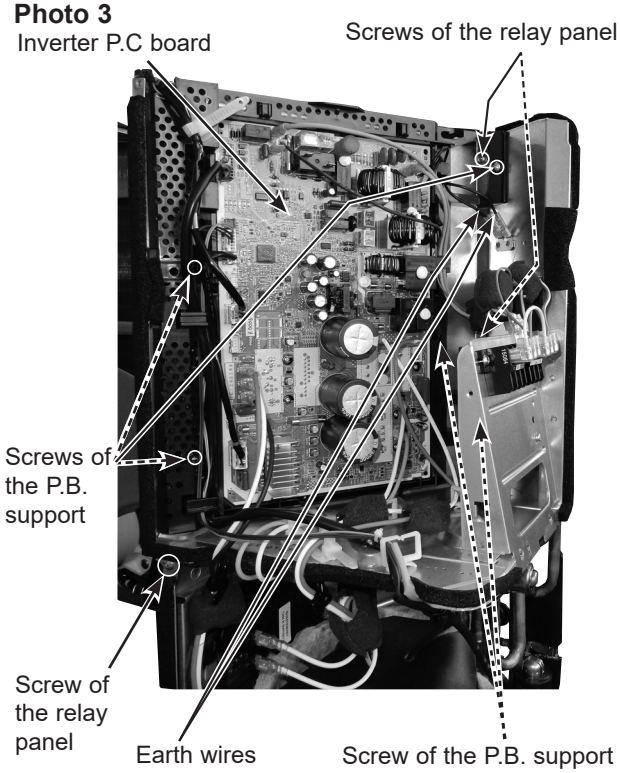

Photo 4

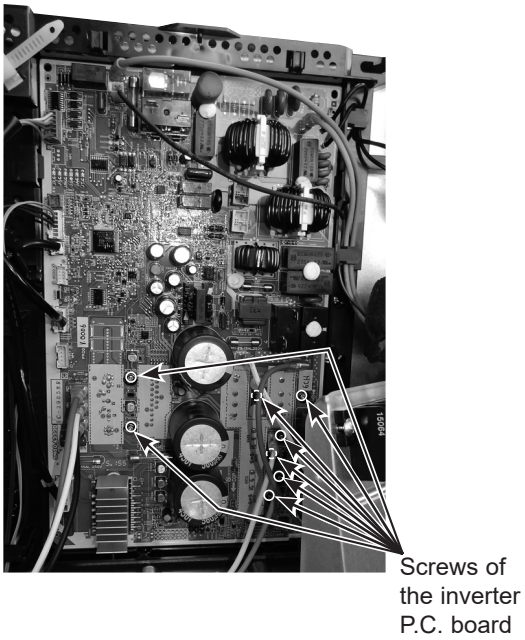

OPERATING PROCEDURE	PHOTOS/FIGURES
3. Removing R.V. coil (1) Remove the cabinet and panels. (Refer to section 1.) (2) Disconnect the following connector: <Inverter P.C. board> CN602 (R.V. coil) (3) Remove the R.V. coil.	**Photo 5** 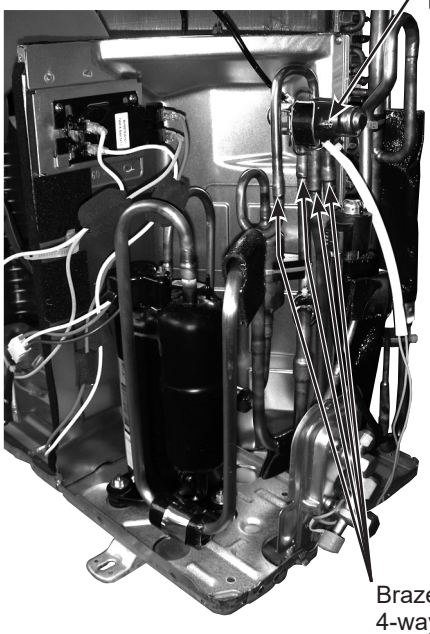
4. Removing the discharge temperature thermistor, defrost thermistor, outdoor heat exchanger temperature thermistor and ambient temperature thermistor (1) Remove the cabinet and panels. (Refer to section 1.) (2) Disconnect the lead wire to the reactor and the following connectors: <Inverter P.C. board> CN671 (Defrost thermistor, discharge temperature thermistor and outdoor heart exchanger temperature thermistor) CN672 (Ambient temperature thermistor) (3) Pull out the discharge temperature thermistor from its holder. (Photo 9) (4) Pull out the defrost thermistor from its holder. (5) Pull out the outdoor heat exchanger temperature thermistor from its holder. (6) Pull out the ambient temperature thermistor from its holder.	**Photo 6** 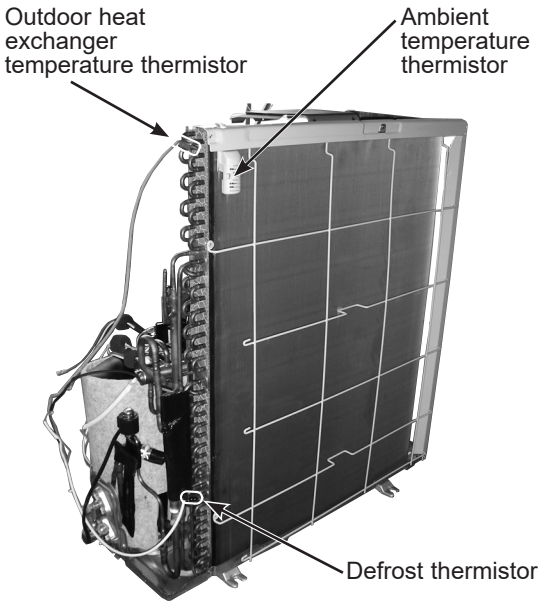

OPERATING PROCEDURE	PHOTOS/FIGURES
5. Removing outdoor fan motor (1) Remove the top panel, cabinet and service panel. (Refer to section 1.) (2) Disconnect the following connectors: <Inverter P.C. board> CN931, CN932 (Fan motor) (3) Remove the propeller fan nut. (4) Remove the propeller fan. (5) Remove the screws fixing the fan motor. (6) Remove the fan motor.	**Photo 7** 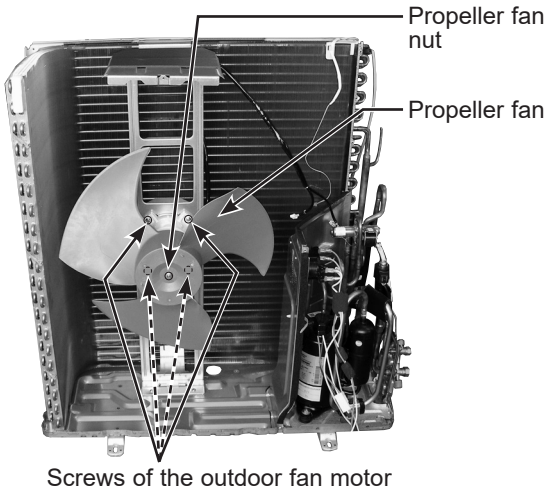
6. Removing the compressor and 4-way valve (1) Remove the top panel, cabinet and service panel. (Refer to section 1.) (2) Remove the back panel. (Refer to section 1.) (3) Remove the screws fixing the relay panel. (4) Remove the relay panel. (5) Remove the inverter assembly. (Refer to section 2.) (6) Recover gas from the refrigerant circuit. **NOTE:** Recover gas from the pipes until the pressure gauge shows 0 kg/cm^2 (0 MPa). (7) Detach the brazed part of the suction and the discharge pipe connected with compressor. (8) Remove the compressor nuts. (9) Remove the compressor. (10) Detach the brazed parts of 4-way valve and pipe. (Photo 6)	**Photo 8** 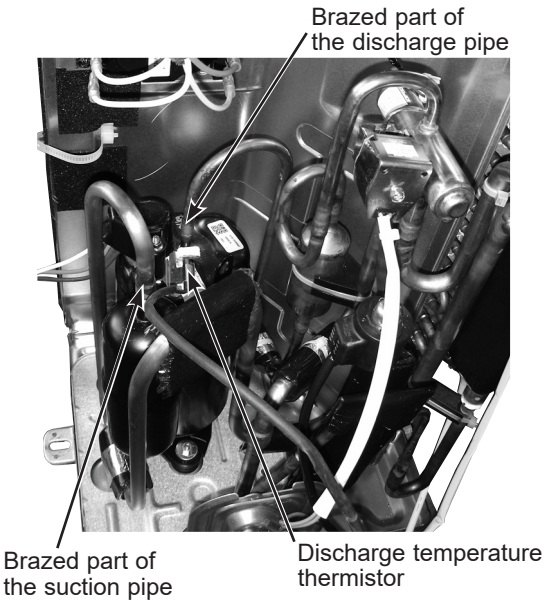

MITSUBISHI ELECTRIC CORPORATION

HEAD OFFICE: TOKYO BUILDING, 2-7-3, MARUNOUCHI, CHIYODA-KU, TOKYO 100-8310, JAPAN

© Copyright 2017 MITSUBISHI ELECTRIC CORPORATION
Issued: Nov. 2021. No. OBH789 REVISED EDITION-F
Issued: Jun. 2021. No. OBH789 REVISED EDITION-E
Issued: Jan. 2021. No. OBH789 REVISED EDITION-D
Issued: Aug. 2020. No. OBH789 REVISED EDITION-C
Issued: Dec. 2019. No. OBH789 REVISED EDITION-B
Issued: Mar. 2019. No. OBH789 REVISED EDITION-A
Published: Dec. 2017. No. OBH789
Made in Japan

Specifications are subject to change without notice.