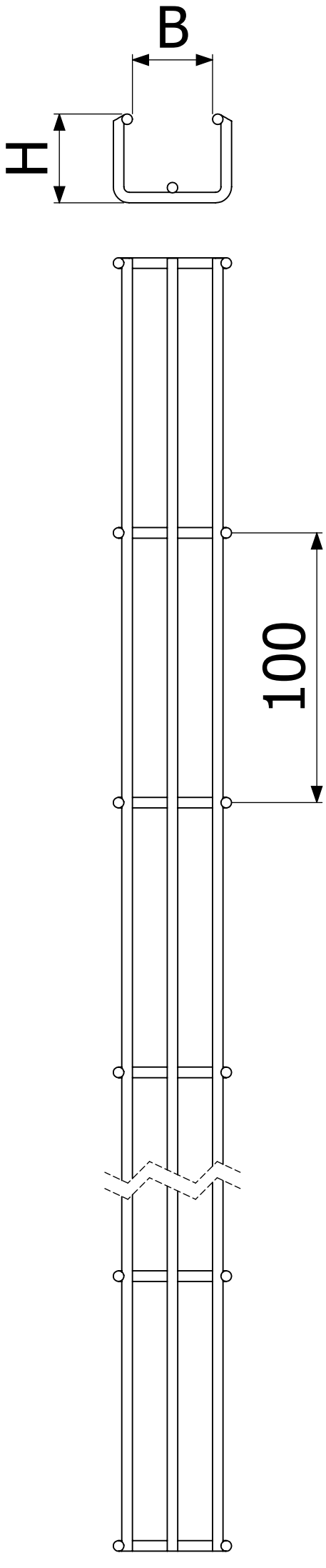
B
H
100